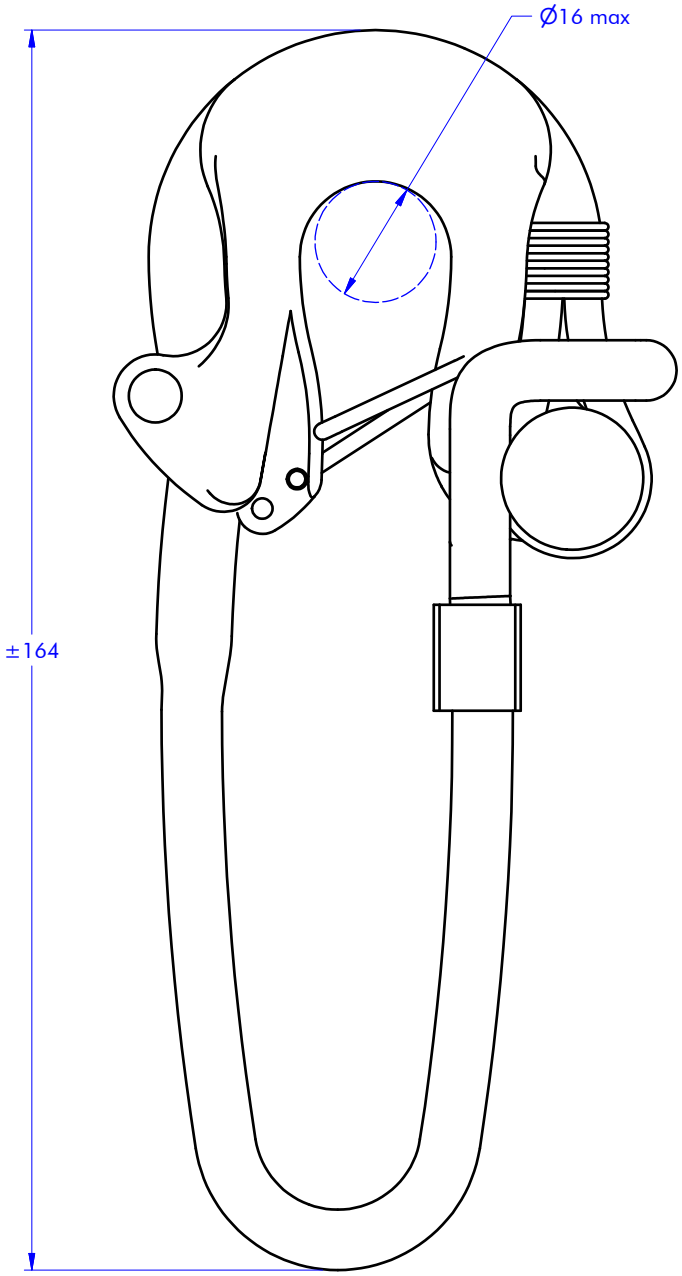

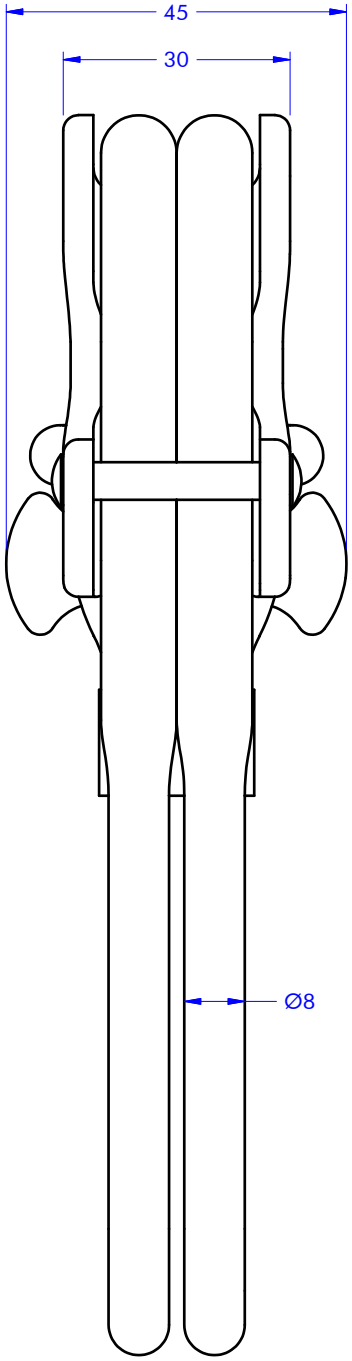

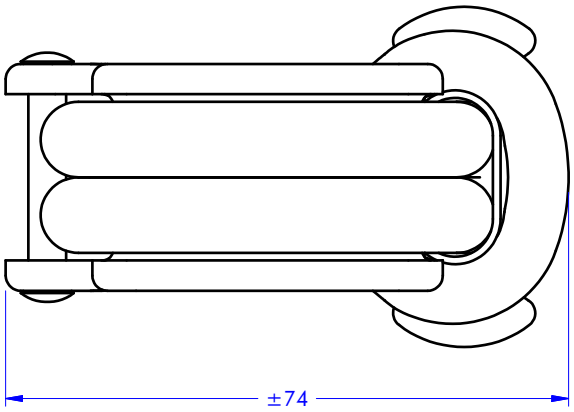

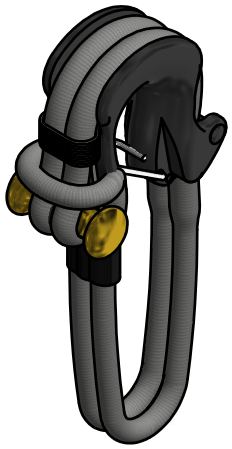

antal	Soft Link (CATEGORY)	Hook (FAMILY)	HK16 (MODEL CODE)	2200 kg (SWL)	130 gr (WEIGHT)
	n.d. (ARTICLE)			08/01/2020 (DATE)	1 : 1 (SCALE)

www.antal.it - antal@antal.it