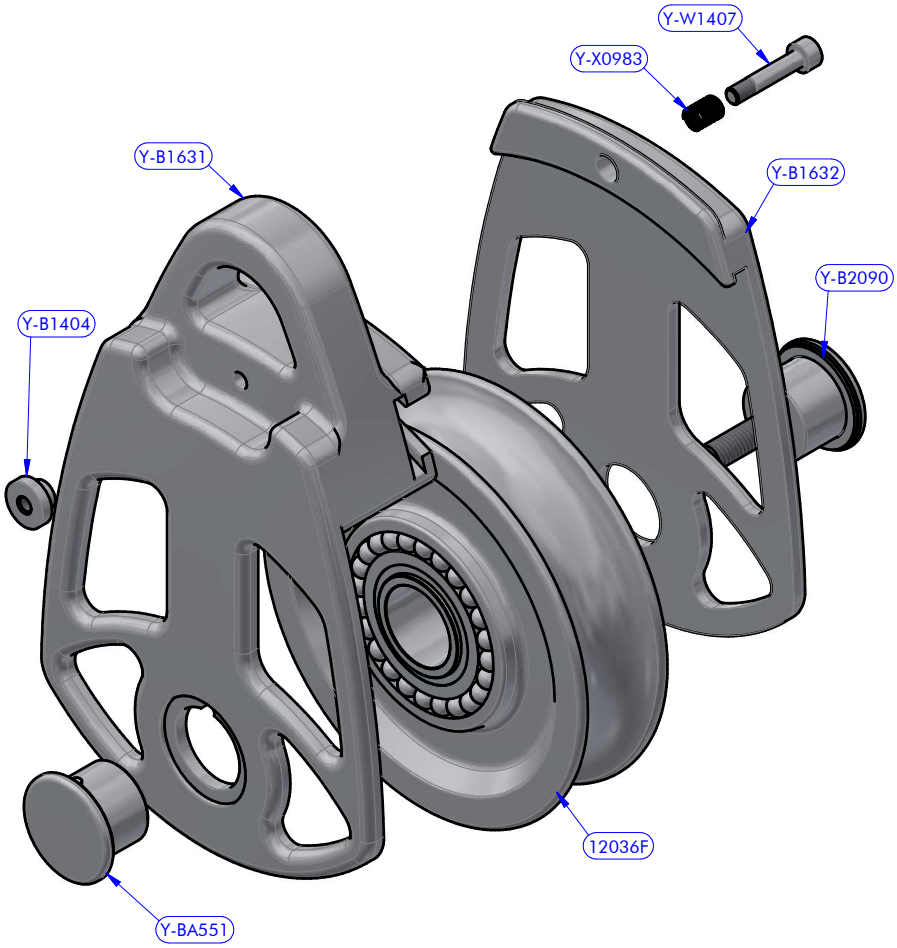

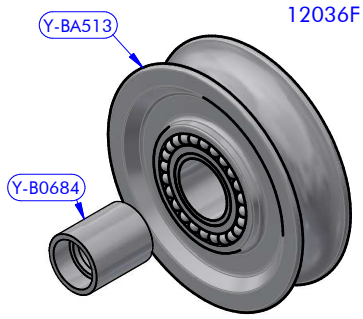

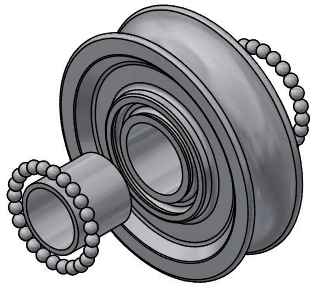

PART LIST 908.125			
CODE	DESCRIPTION	MATERIAL	Q.TY
12036F	Resin	Various	1
Y-B1404	Knob	S.Steel	1
Y-B1631	Fixed cheekplate	Aluminium	1
Y-B1632	Mobile cheekplate	Aluminium	1
Y-B2089	Resin washer	POM-C	1
Y-B2090	Resin washer	Mekton	1
Y-BA551	Caps kit	S.Steel	1
Y-W1407	Screw	S.Steel	1
Y-X0983	Compression spring	S.Steel	1

PART LIST 12036F			
CODE	DESCRIPTION	MATERIAL	Q.TY
Y-B0684	Hub	S.Steel	1
Y-BA513	Sheave assy	Various	1

antal	LINEA: Apribili	GRUPPO: Maxi	908.125	DATA: 04/09/2023
	DESCRIZIONE: Taglia 120		CODICE MAGAZZINO	REVISIONE / PAG. 1 / 1