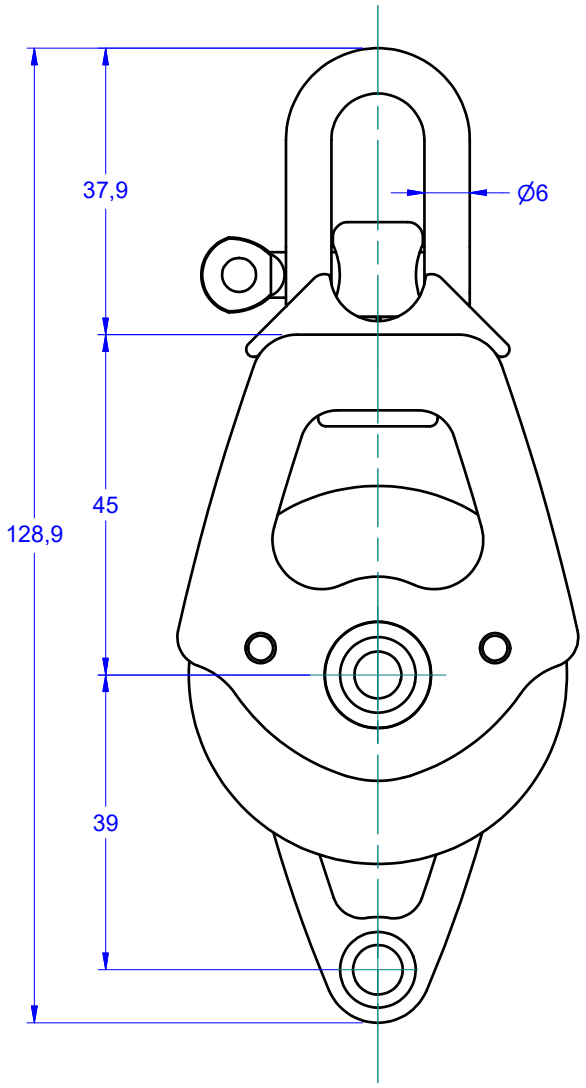

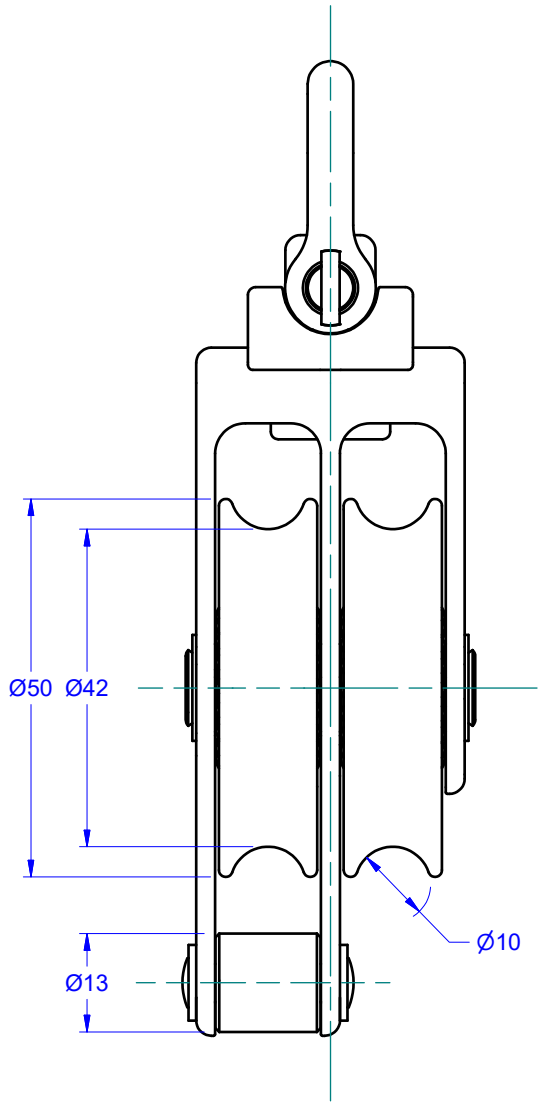

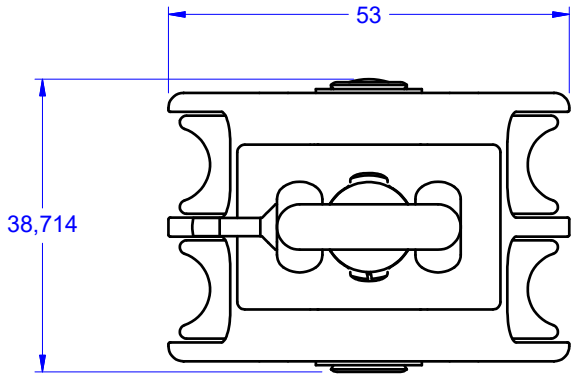

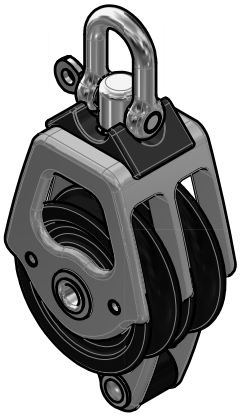

antal	Blocks (CATEGORY)	OPF Series (FAMILY)	00504 (MODEL CODE)	800 kg (SWL)	184 gr (WEIGHT)
	Double becket (ARTICLE)			29/10/2019 (DATE)	1 : 1 (SCALE)

www.antal.it - antal@antal.it