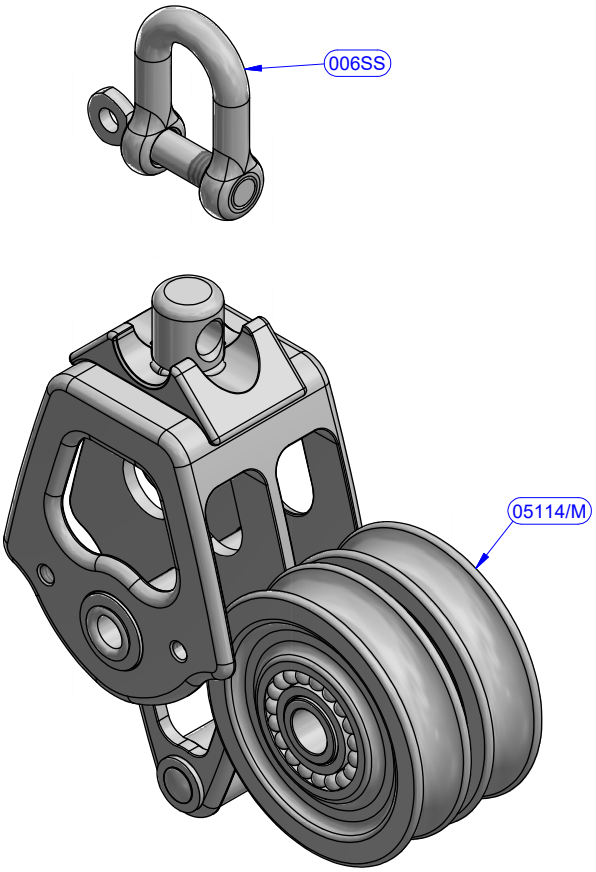

PART LIST			
CODE	DESCRIPTION	MATERIAL	Q.TY
006SS	Shackle	Various	1
05114/M	Sheave	Mekton	2

antal	OPF Series FAMILY	Double becket ARTICLE	00504 MODEL CODE	29/10/2019 DATE	01 REV.
	Exploded view DESCRIPTION			17071106 DWG N.	/ PG.