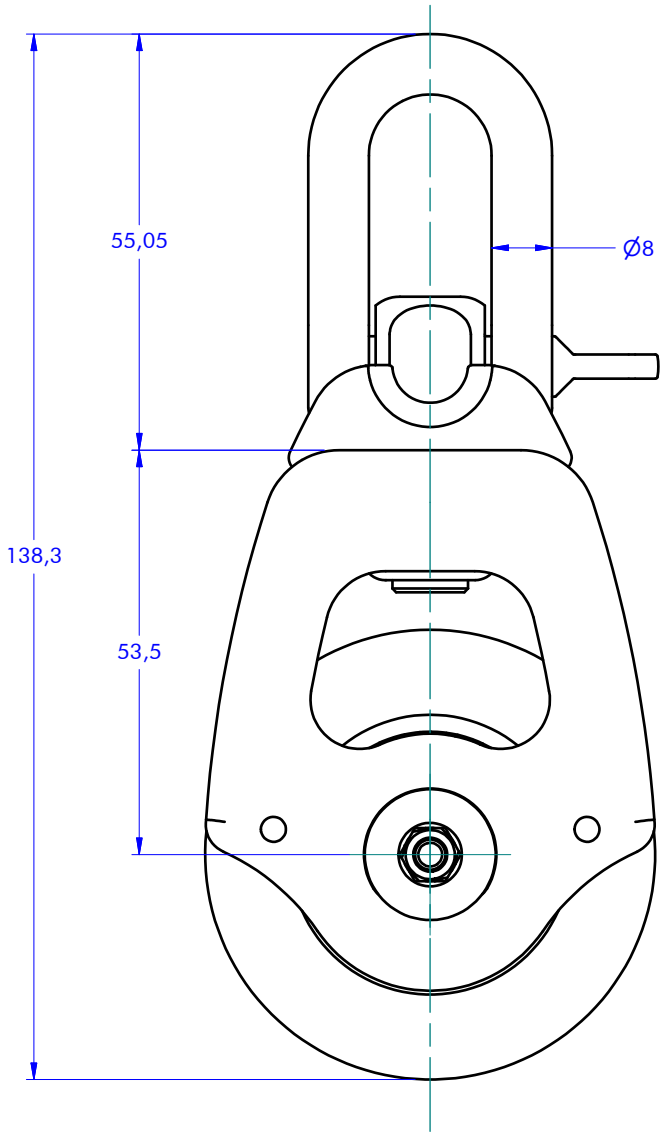

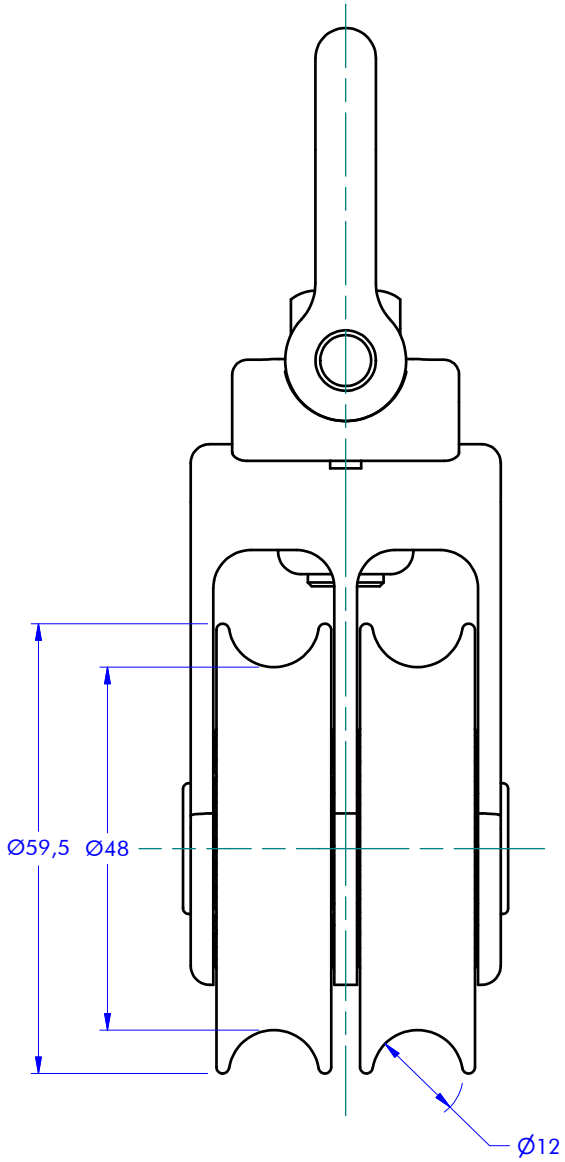

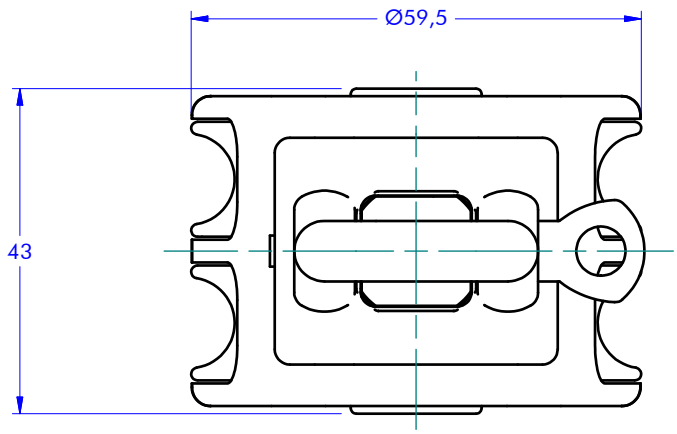

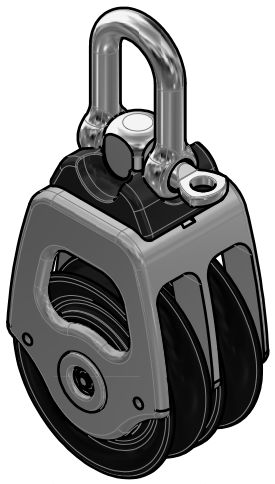

antal	Blocks (CATEGORY)	OPF Series (FAMILY)	00603 (MODEL CODE)	800 kg (SWL)	0.16 kg (WEIGHT)
	Double block (ARTICLE)			15/07/2020 (DATE)	1 : 1 (SCALE)

www.antal.it - antal@antal.it