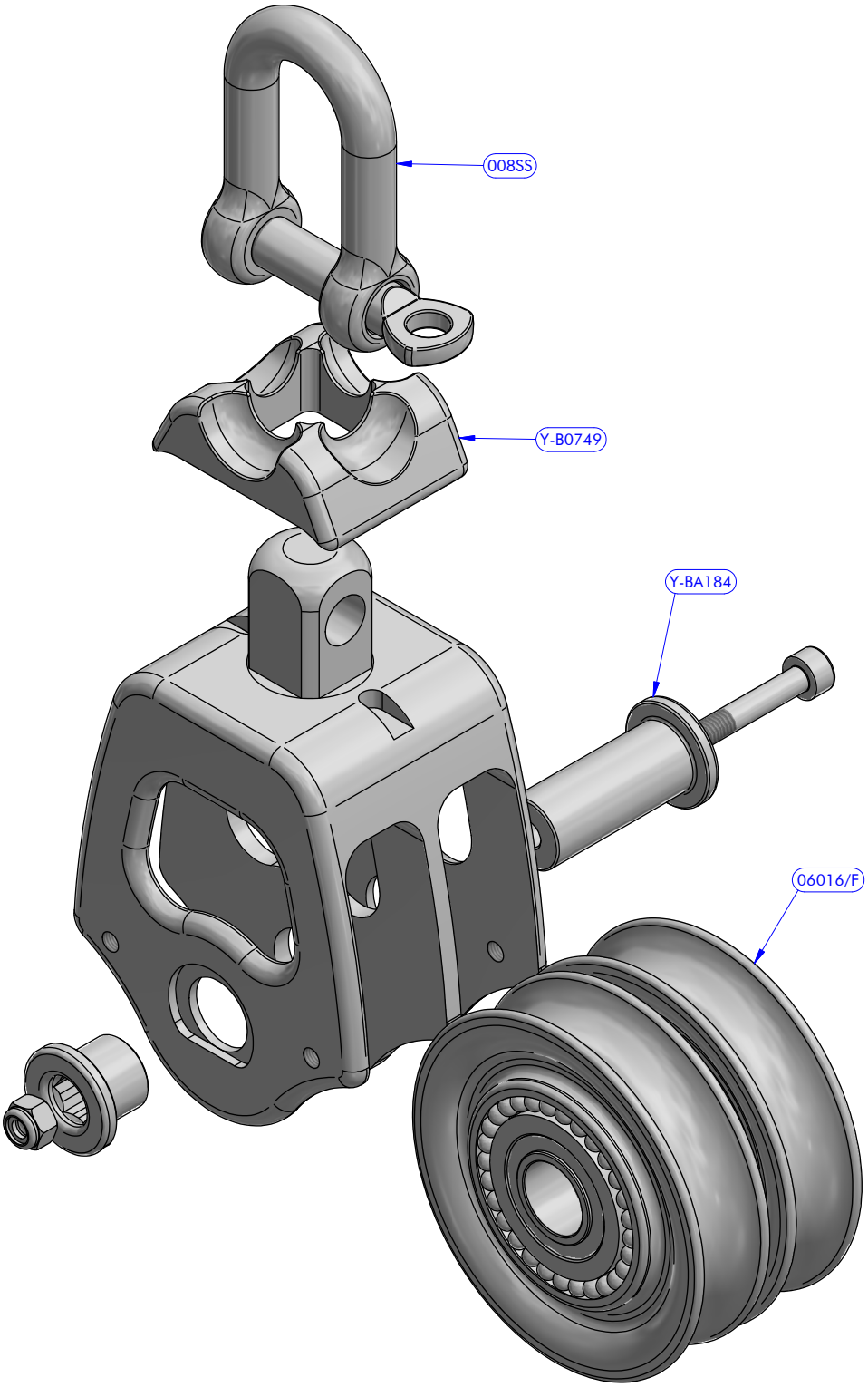

PART LIST			
CODE	DESCRIPTION	MATERIAL	Q.TY
008SS	Shackle	Various	1
06016/F	Sheave	Mekton	2
Y-B0749	Head lock	Plastic	1
Y-BA184	Caps kit	Various	1

antal	OPF Series (FAMILY)	Double block (ARTICLE)	00603 (MODEL CODE)	15/07/2020 (DATE)	00 (REV.)
	Exploded view (DESCRIPTION)			17022715 (DWG N.)	/ (PG.)