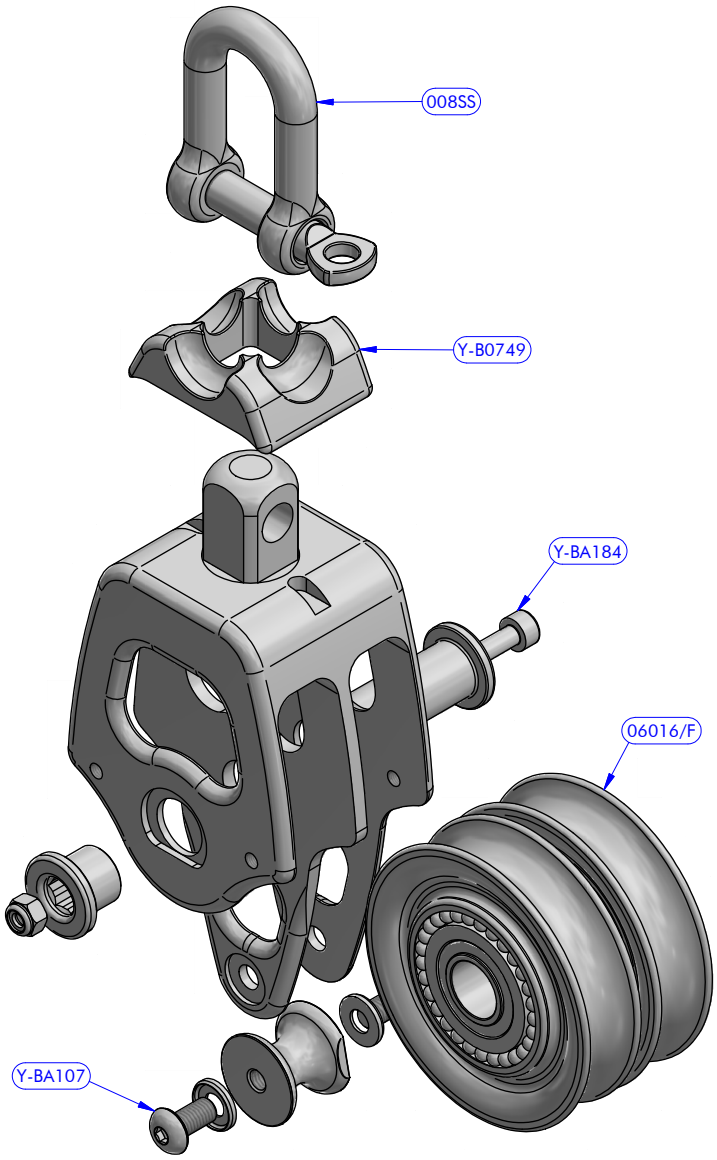

PART LIST			
CODE	DESCRIPTION	MATERIAL	Q.TY
008SS	Shackle	Various	1
06016/F	Sheave	Mekton	2
Y-B0749	Head lock	Plastic	1
Y-B0811	Cheekplate	Aluminium	1
Y-BA107	Becket kit	Various	1
Y-BA184	Caps kit	Various	1

antal	OPF Series FAMILY	Double becket ARTICLE	00604 MODEL CODE	23/07/2020 DATE	00 REV.
	Exploded view DESCRIPTION			17071704 DWG N.	/ PG.