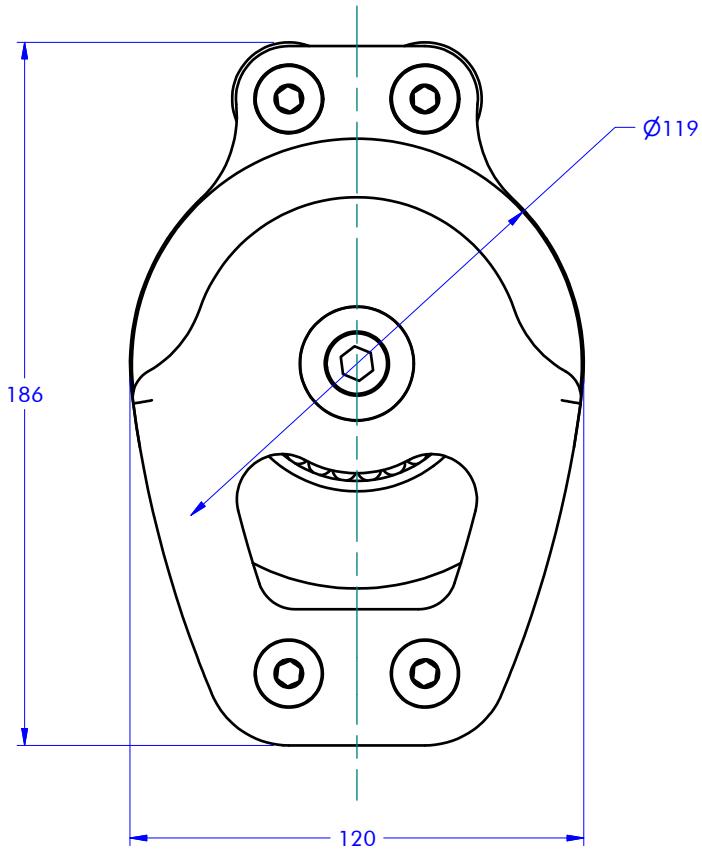

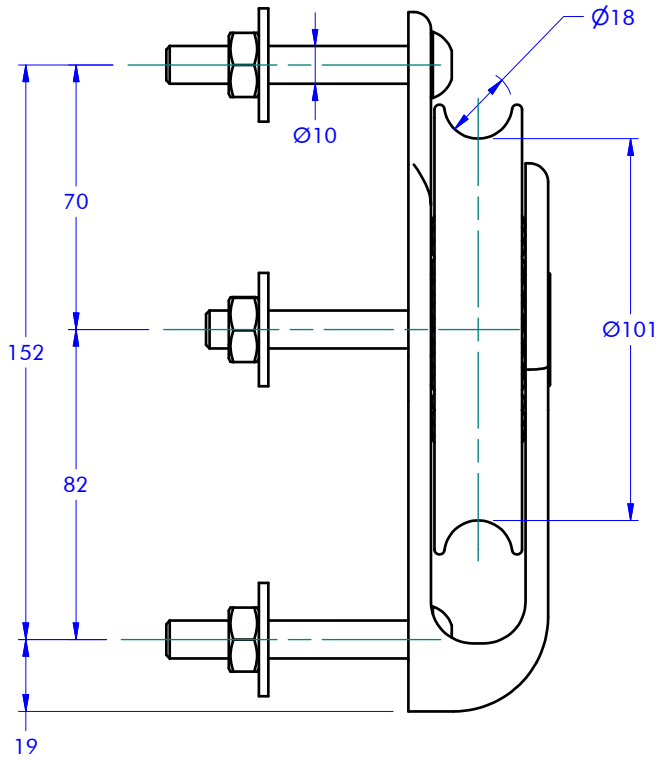

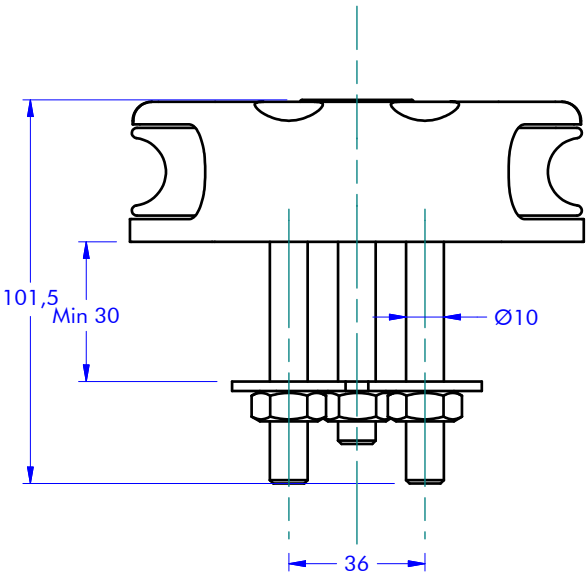

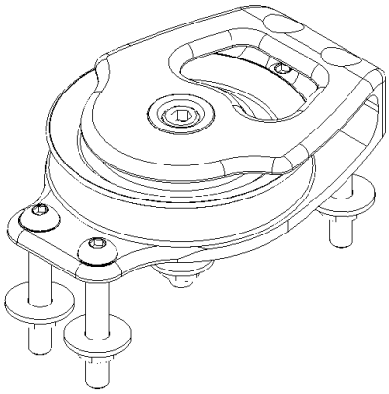

antal	Blocks (CATEGORY)	OPF Series (FAMILY)	01211 (MODEL CODE)	4500 kg (SWL)	1.13 kg (WEIGHT)
	Deck Block (ARTICLE)			06/04/2018 (DATE)	1 : 2 (SCALE)

www.antal.it - antal@antal.it