All information is copyright of allen ©

A2020PSHK

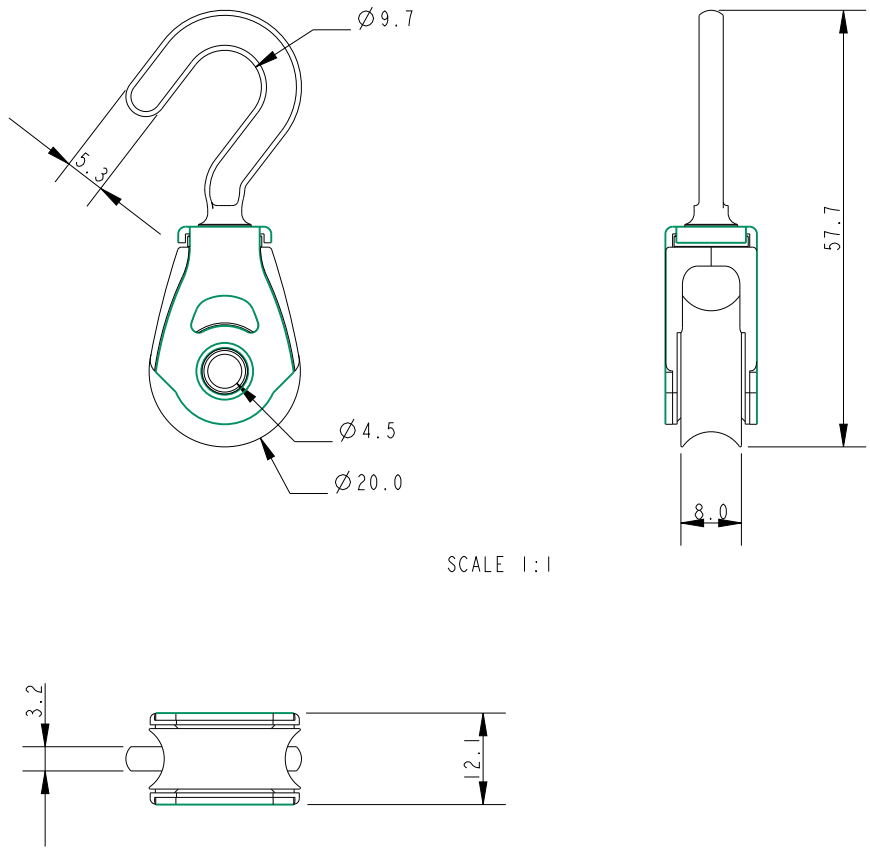

Specification				
Length mm	Line Diameter mm	Shackle Pin mm	Breaking Load kg	Weight g
57.7	6	-	350	17.9

DIMENSIONS FOR REFERENCE ONLY

allenbrothers.co.uk
+44(0)1621 772477

Title	Description
A2020PSHK-REF	20mm Swivel Hook