All information is copyright of allen ©

A2030XHL

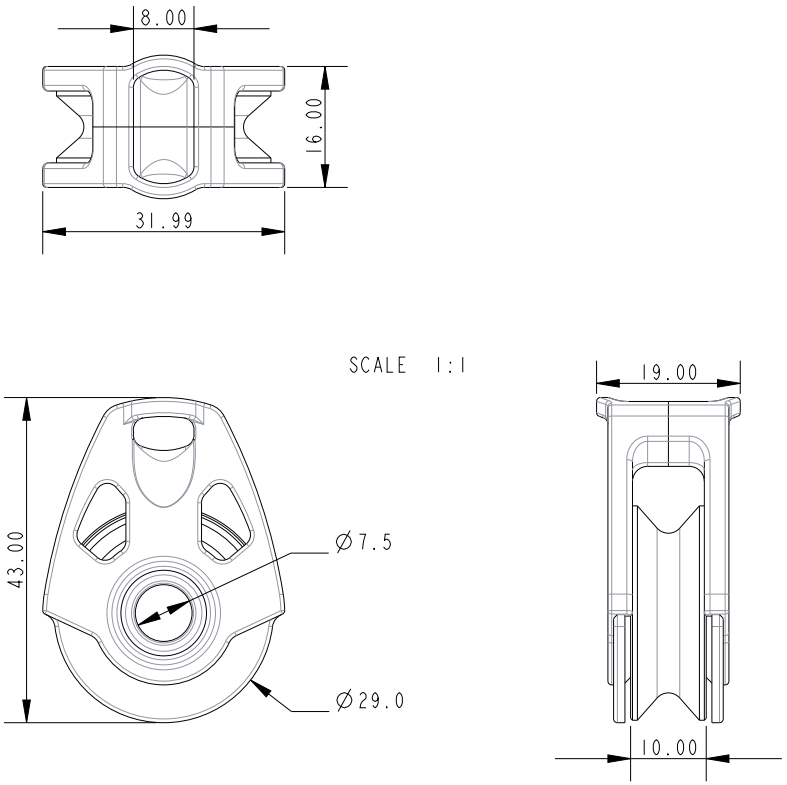

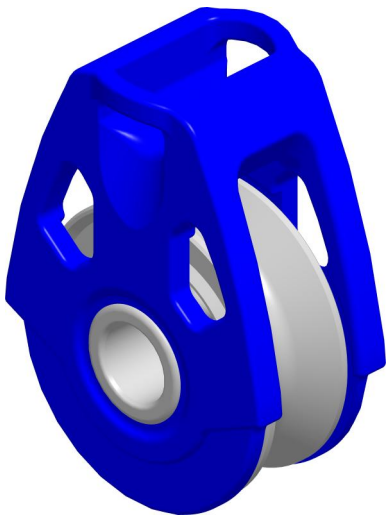

SCALE 3:2

Available colours: Black, Blue, Silver,Purple,Gold, Orange

Specification						
Length mm	Line Diameter mm	Shackle Pin mm	Breaking Load kg	MWL kg	Weight g	Bearing Detail
43	8	-	1250	350	41	Stainless Steel

DIMENSIONS FOR REFERENCE ONLY

allenbrothers.co.uk
+44(0)1621 772477

Title	Description
A2030XHL-REF	Extreme High Load Block