All information is copyright of allen ©

A2131HL

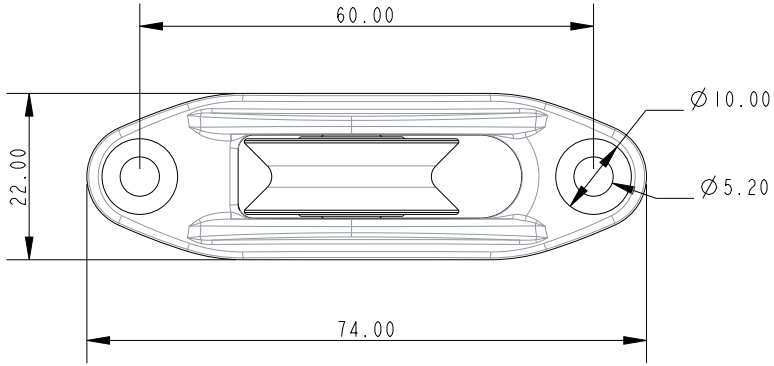

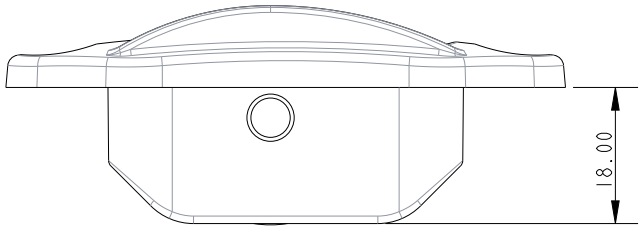

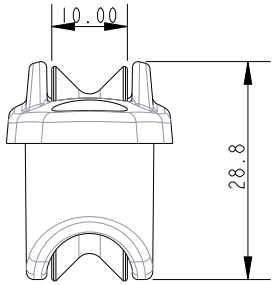

SCALE 3:2

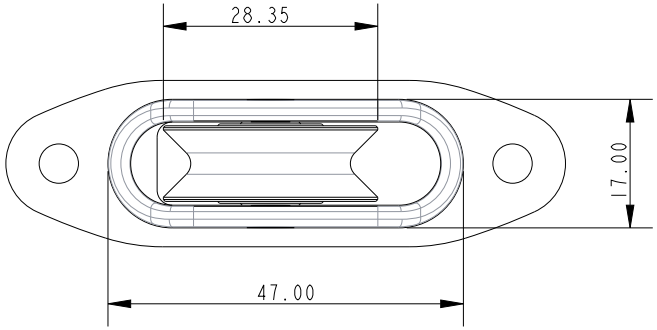

SCALE 1:1

NOTES

Plain stainless steel bearing for wire use

Specification					
Length mm	Line Diameter mm	Hole Centre mm	Breaking Load kg	Weight g	Bearing Details
74	8	60	500	25.6	Plain Bearing

DIMENSIONS FOR REFERENCE ONLY

allenbrothers.co.uk
+44(0)1621 772477

Title	Description
A2131HL-REF	Single HL Plain