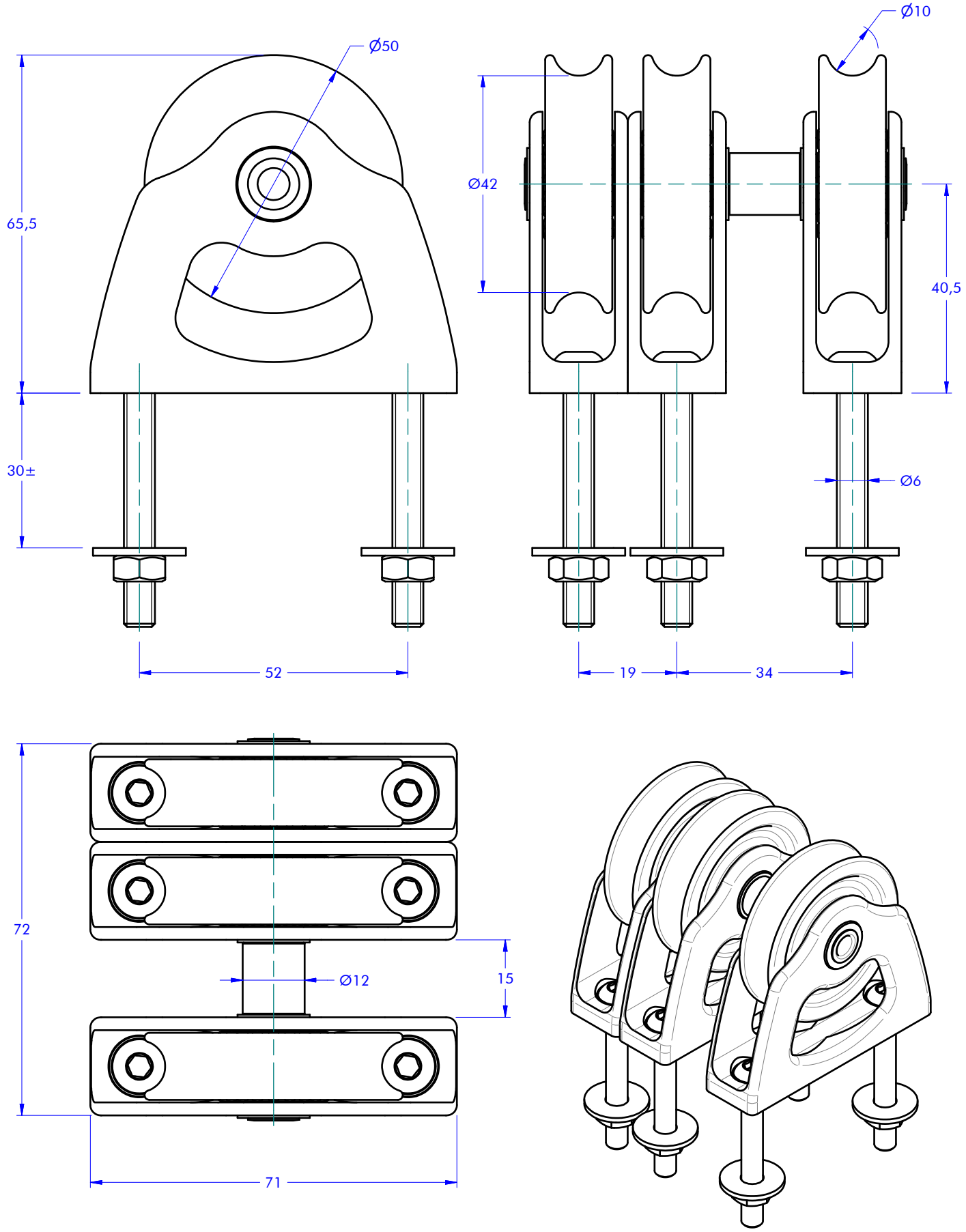

antal	Blocks CATEGORY	OPF Series FAMILY	00523/3A MODEL CODE	3 x 600 kg SWL	250 gr WEIGHT
	Upright ARTICLE			15/01/2019 DATE	1 : 1 SCALE

www.antal.it - antal@antal.it