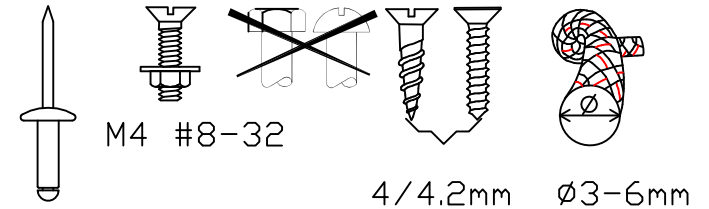

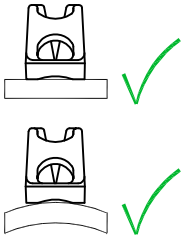

Notes: –
For marine applications, use a silicone sealant or a bedding compound to avoid electrolytic action between the cleat and metal fastenings.

Standard rivet gun nozzles do not fit inside cleat.

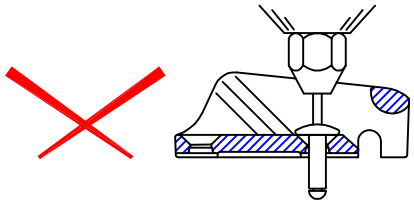

Use 2 or 3 nuts to extend nozzle.

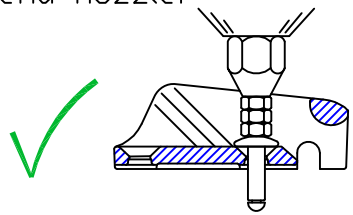

Extended nozzle is best
Consult rivet gun supplier.

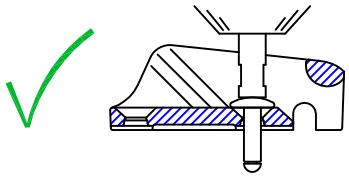

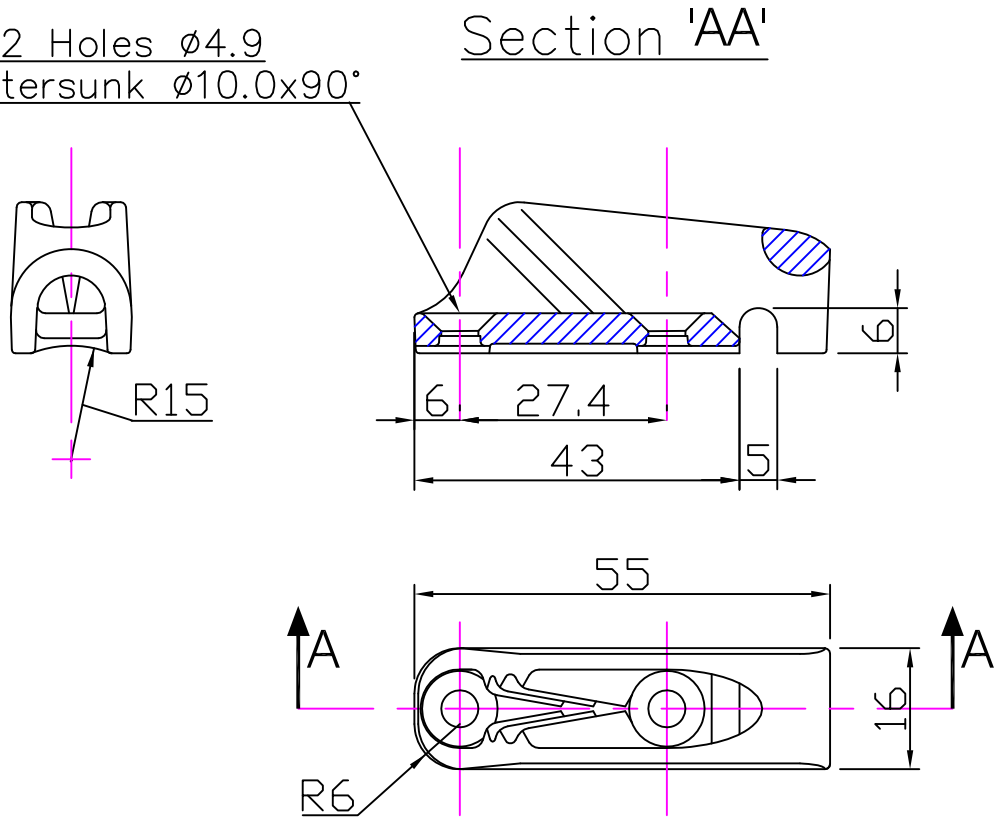

Clamcleat® Rope cleats
Clamcleats Limited
Watchmead
Welwyn Garden City
Hertfordshire AL7 1AP
England
Telephone +44 (0)1707 330101
Fax +44 (0)1707 321269
Email sales@clamcleat.com
www.clamcleat.com

Scale 1:1
All dimensions in mm.

Issue: 6 April 2010
ID211–Mk2s2.dwg

Material:
Diecast Aluminium

Installation Drawing for: –

CL211 Mk2/S2

Mk2 Racing Junior
with Becket