All information is copyright of allen ©

A2030-40

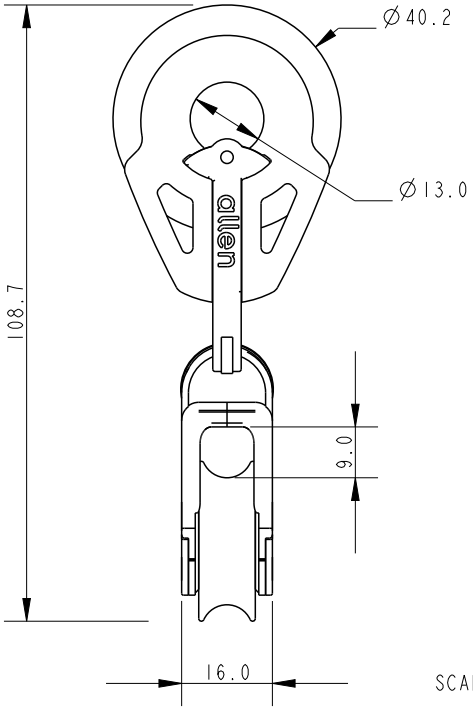

SCALE 3:4

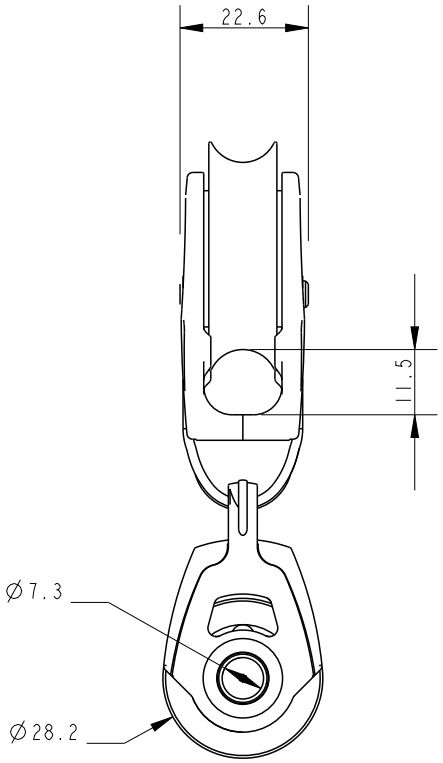

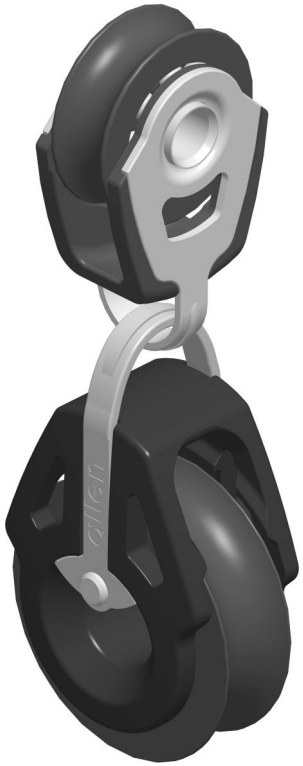

SCALE 1:1

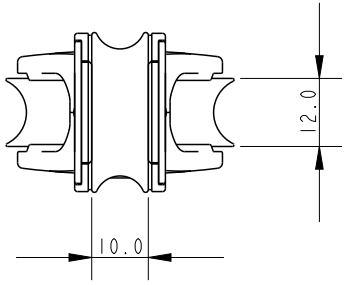

Specification						
Length mm	Line Diameter mm	Shackle Pin mm	Breaking Load kg	MWL kg	Weight g	Bearing Detail
110	8/10	-	750	140	63	Stainless Steel

DIMENSIONS FOR REFERENCE ONLY

allenbrothers.co.uk
+44(0)1621 772477

Title	Description
A2030-40-REF	Linked 30 And 40 Blocks