All information is copyright of allen ©

A2036M

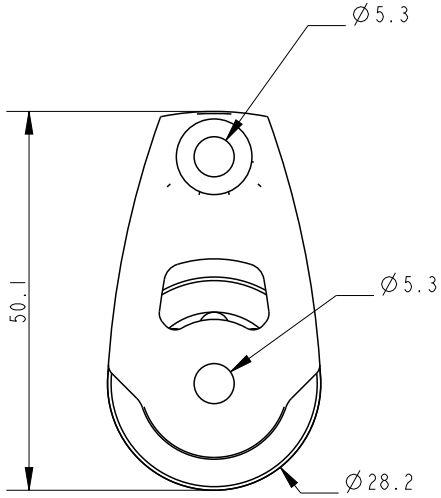

SCALE 1:1

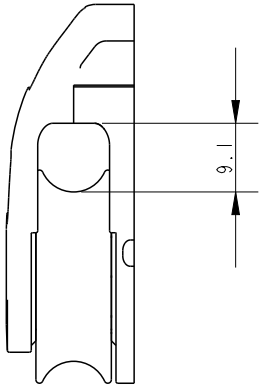

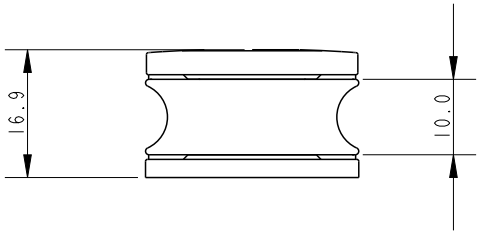

SCALE 3:2

Specification						
Length mm	Line Diameter mm	Hole Centres mm	Breaking Load kg	MWL kg	Weight g	Bearing Detail
50	8	30	400	140	24	Stainless Steel

DIMENSIONS FOR REFERENCE ONLY

allenbrothers.co.uk
+44(0)1621 772477

Title	Description
A2036M-REF	Composite Cheek