All information is copyright of allen ©

A2050Tii

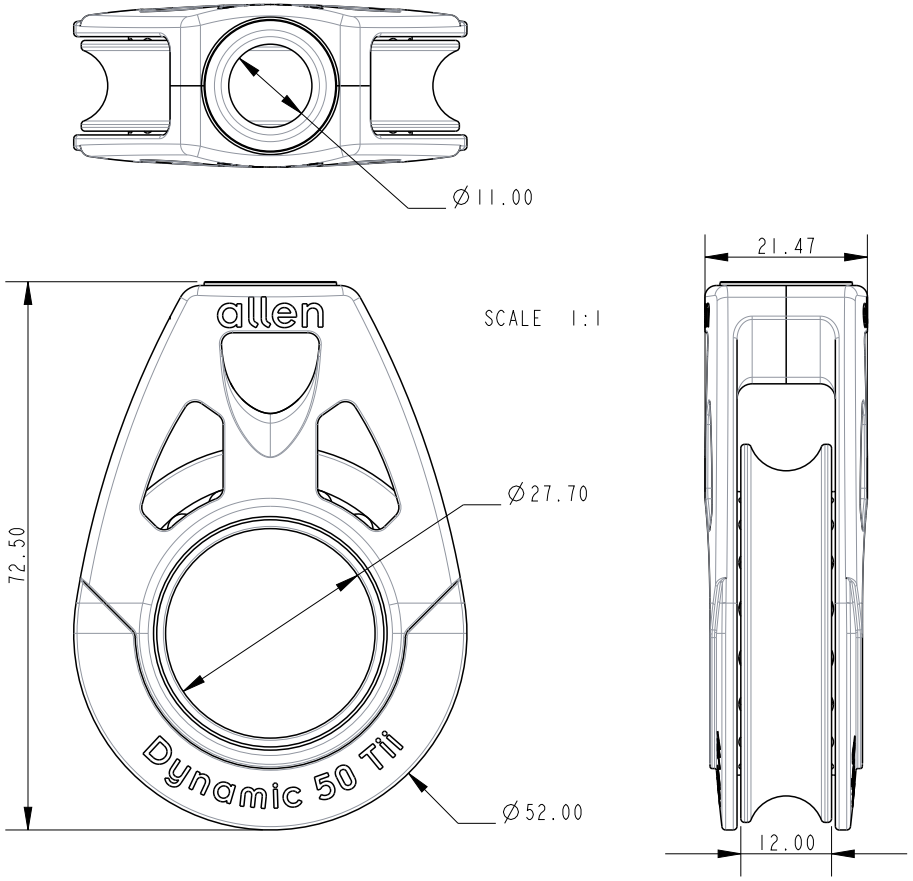

SCALE 1:1

Specification						
Length mm	Line Diameter mm	Shackle Pin mm	Breaking Load kg	MWL kg	Weight g	Bearing Detail
72.5	10	-	900	600	61	Stainless Steel

DIMENSIONS FOR REFERENCE ONLY

allenbrothers.co.uk
+44(0)1621 772477

Title	Description
A2050TII-REF	Single Tii-On