All information is copyright of allen ©

A4886B

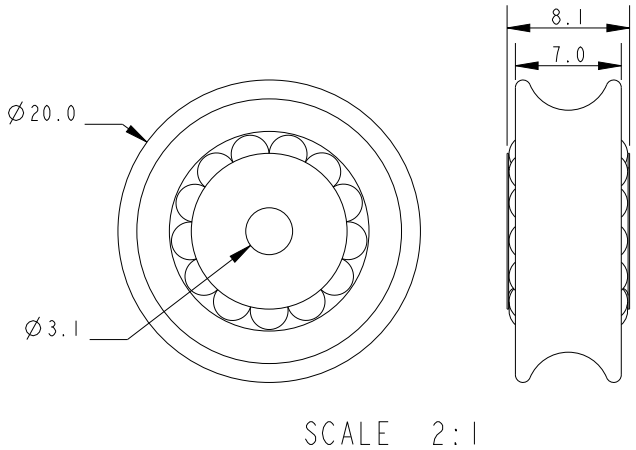

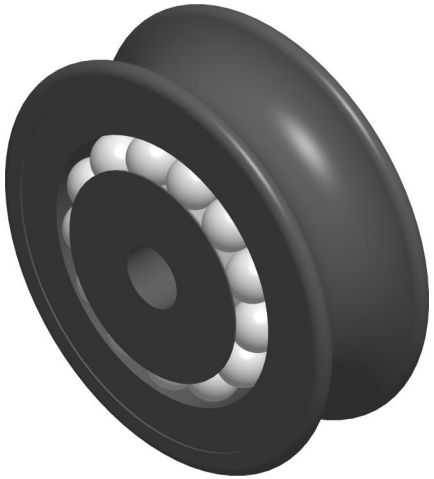

Specification					
Diameter mm	Width mm	Bore mm	Weight g	Breaking Load kg	Colour
20	8.1	3.1	4.6	540	-

DIMENSIONS FOR REFERENCE ONLY

allenbrothers.co.uk
+44(0)1621 772477

Title	Description
A4886B-REF	Acetal Sheave With Double Row Ball Bearing