All information is copyright of allen ©

A4086

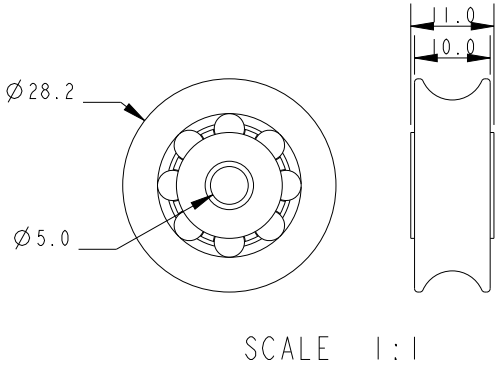

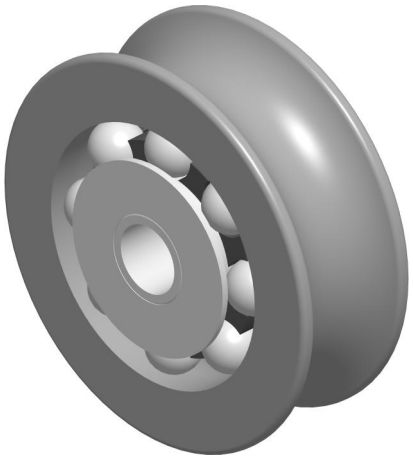

Specification					
Diameter mm	Width mm	Bore mm	Weight g	Breaking Load kg	Colour
28.2	11	5.1	9.8	700	Grey

DIMENSIONS FOR REFERENCE ONLY

allenbrothers.co.uk
+44(0)1621 772477

Title	Description
A4086-REF	Acetal Sheave With Double Row Ball Bearing