All information is copyright of allen ©

A1086

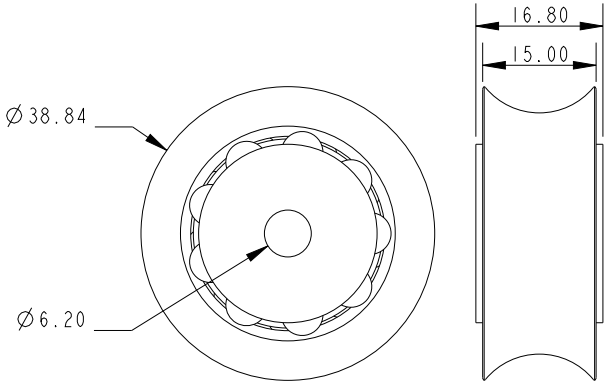

SCALE 1:1

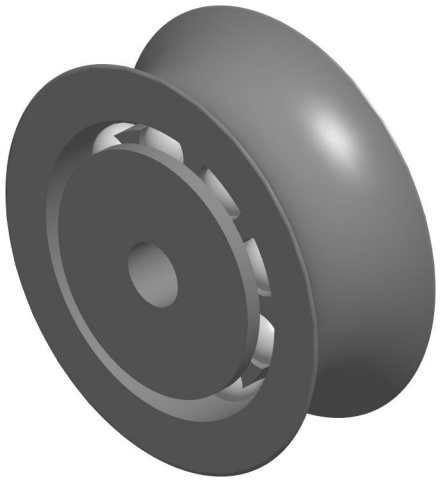

Specification					
Diameter mm	Width mm	Bore mm	Weight g	Breaking Load kg	Colour
38.8	16.8	6.2	27.1	700	Grey

DIMENSIONS FOR REFERENCE ONLY

allenbrothers.co.uk
+44(0)1621 772477

Title	Description
A1086-REF	Acetal Sheave with Double Row Ball Bearing