Sheet		
1	of	1

Tolerance .XX ± 0.05
Unless stated otherwise

All information is copyright of allen ©

A--77

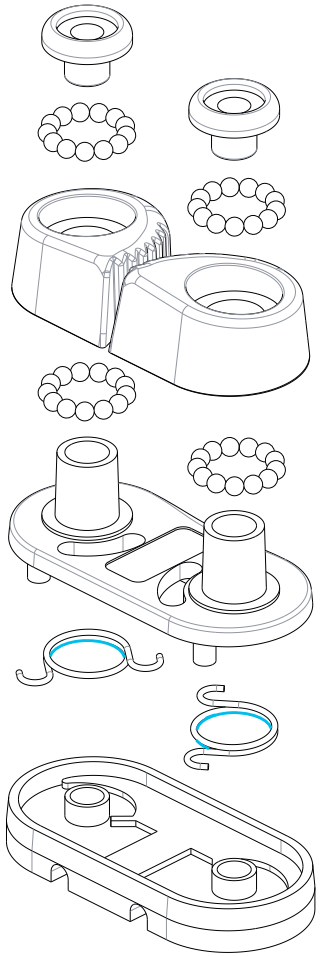

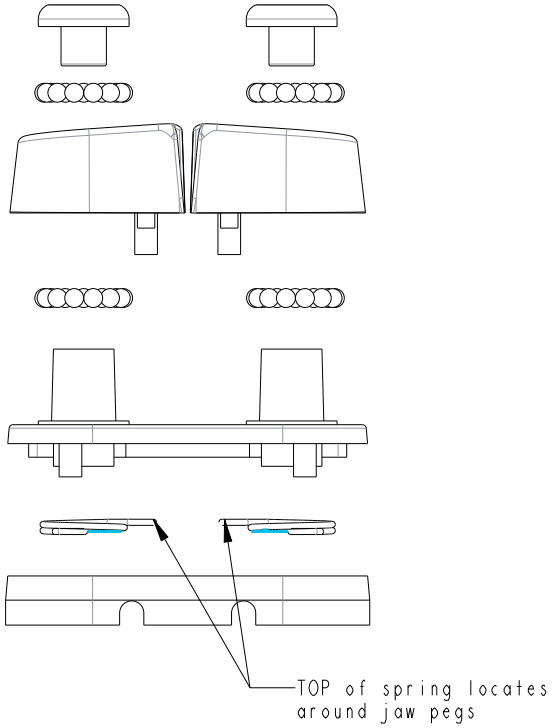

NOTE

Title	Description	Project Name	Date	Drawn By
A--77_CATALOGUE_EXPLOSION	Small Alloy Cam Cleat	project	11-Oct-18	J.Hambly