All information is copyright of allen ©

A..77

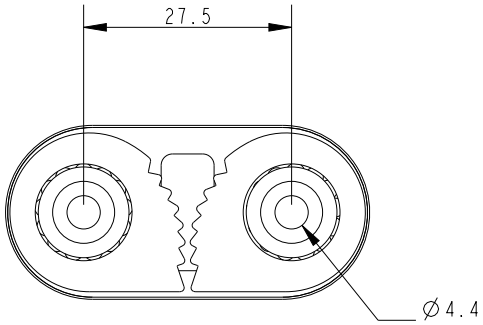

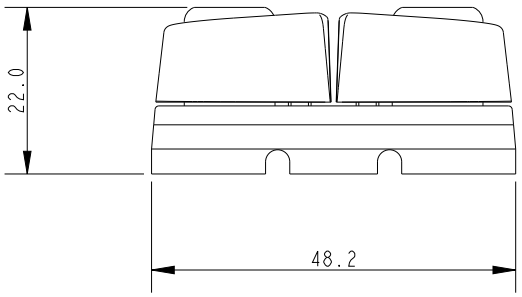

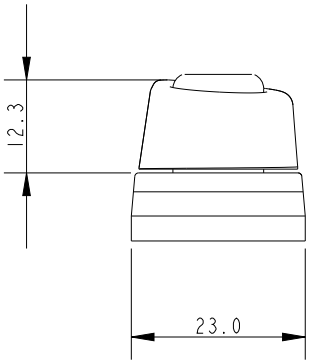

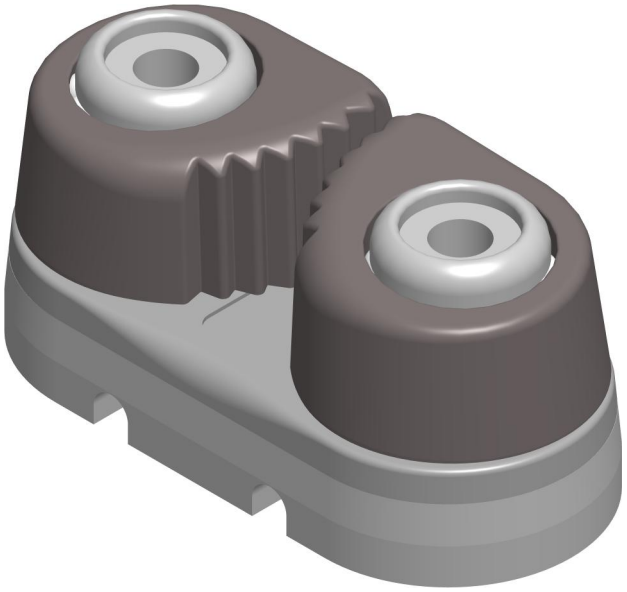

Specification					
HWD mm	Line Diameter mm	Fixing Hole Pitch mm	Fixing Hole Size mm	MWL kg	Weight g
22x48x23	2 - 6	27.5	M4/UNC No. 8	100	29

DIMENSIONS FOR REFERENCE ONLY

allenbrothers.co.uk
+44(0)1621 772477

Title	Description
A--77-REF	Small Alloy Cam Cleat