All information is copyright of allen ©

A..77-497

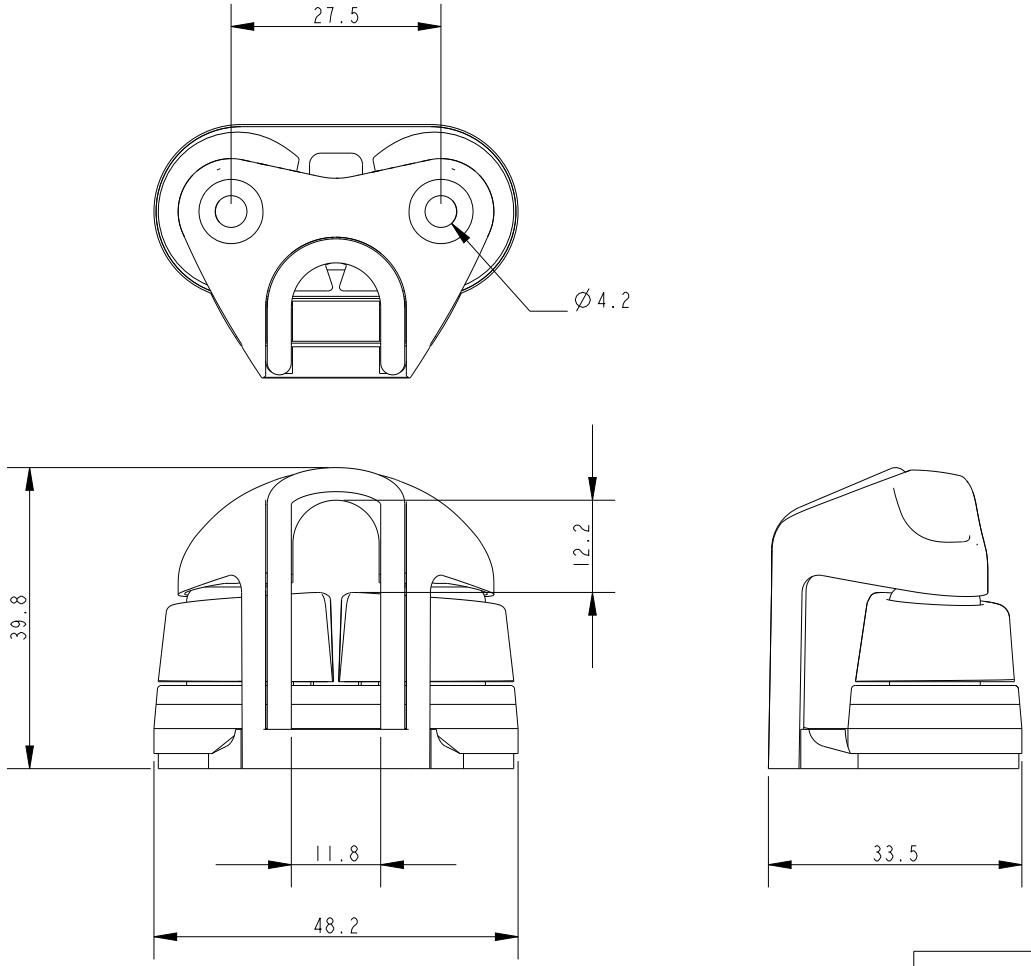

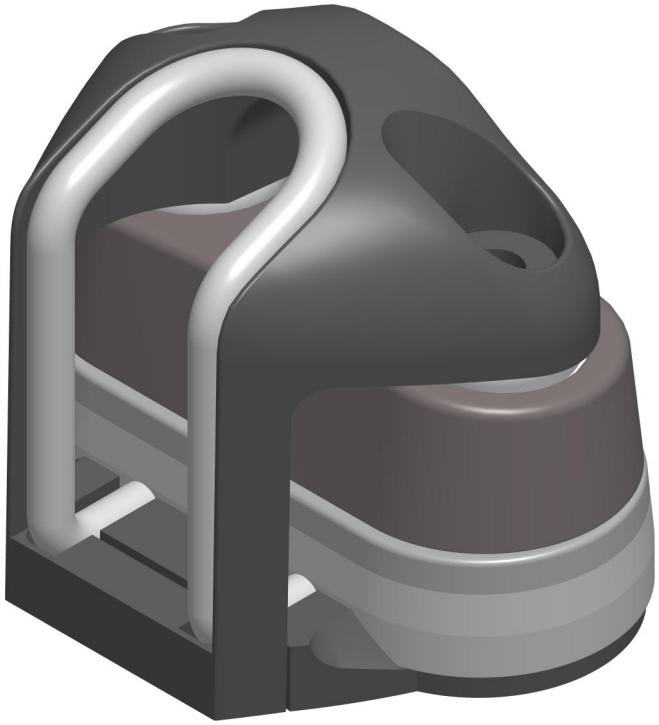

Specification					
HWD mm	Line Diameter mm	Fixing Hole Pitch mm	Fixing Hole Size mm	MWL kg	Weight g
40x48x34	2 - 6	27.5	M4/UNC No. 8	100	50

DIMENSIONS FOR REFERENCE ONLY

allenbrothers.co.uk
+44(0)1621 772477

Title	Description
A--77-497-REF	Small Alloy Cleat and Fairlead