All information is copyright of allen ©

A4146

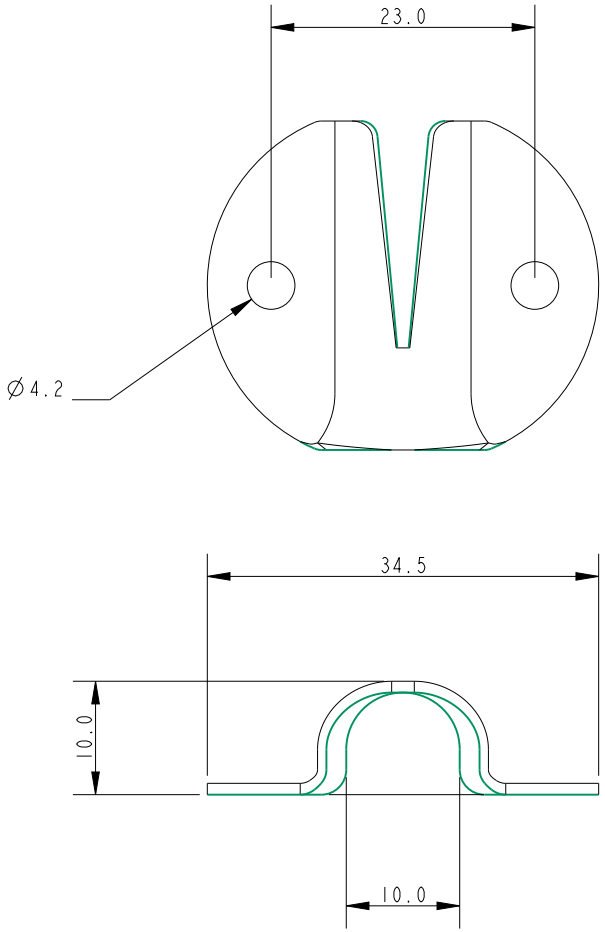

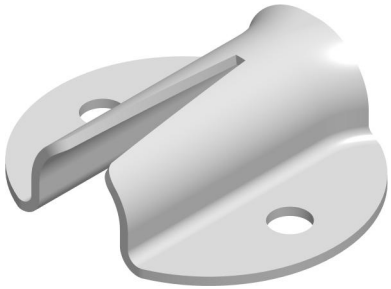

Specification				
HWD mm	Line Size mm	Fixing Hole Size mm	Fixing Hole Pitch mm	Weight g
10x35x29	3-6	M4	23	9

DIMENSIONS FOR REFERENCE ONLY

allenbrothers.co.uk
+44(0)1621 772477

Title	Description
A4146-REF	Stainless Steel V Cleat