All information is copyright of allen ©

A.122

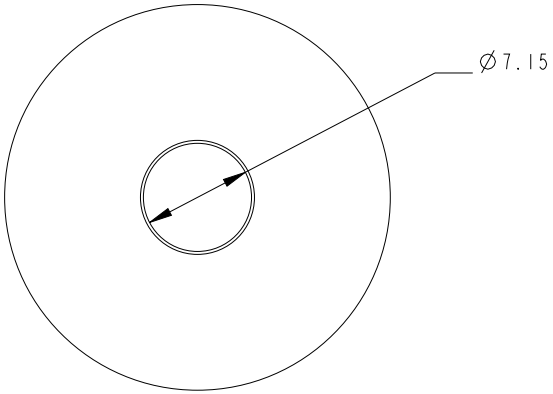

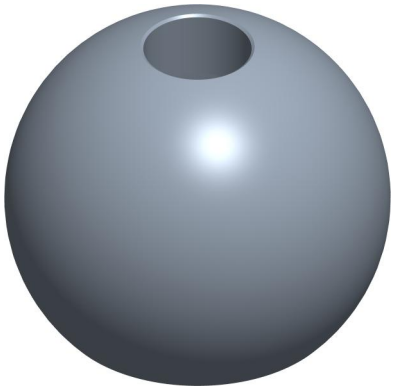

SCALE 2:1

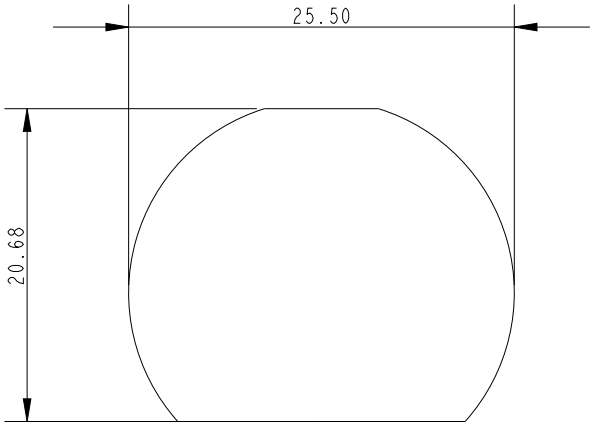

SCALE 2:1

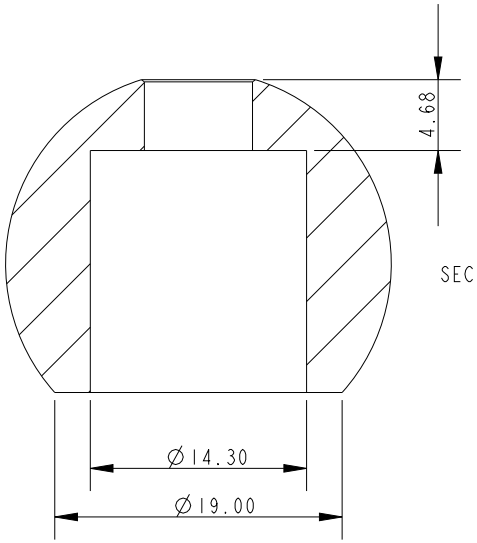

SECTION A-A

Specification	
Line Diameter mm	Size mm
7	25

DIMENSIONS FOR REFERENCE ONLY

allenbrothers.co.uk
+44(0)1621 772477

Title	Description
A-122-REF	Large Ball Stopper