All information is copyright of allen ©

A.222

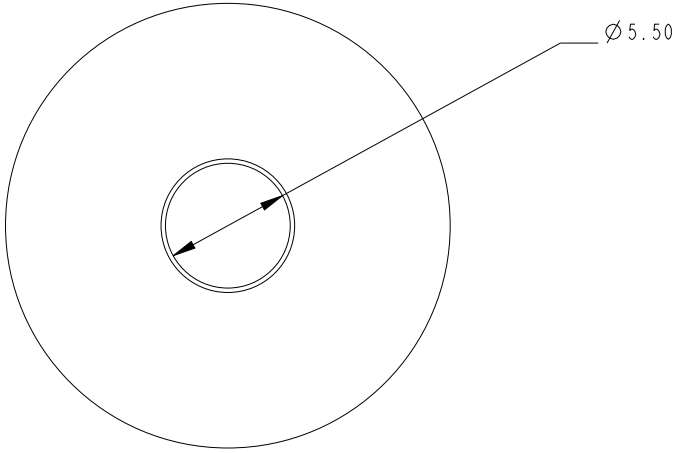

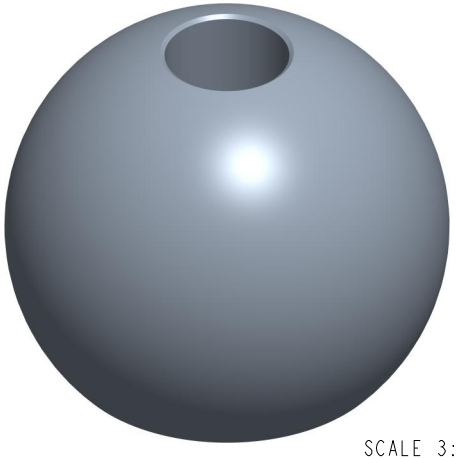

SCALE 3:1

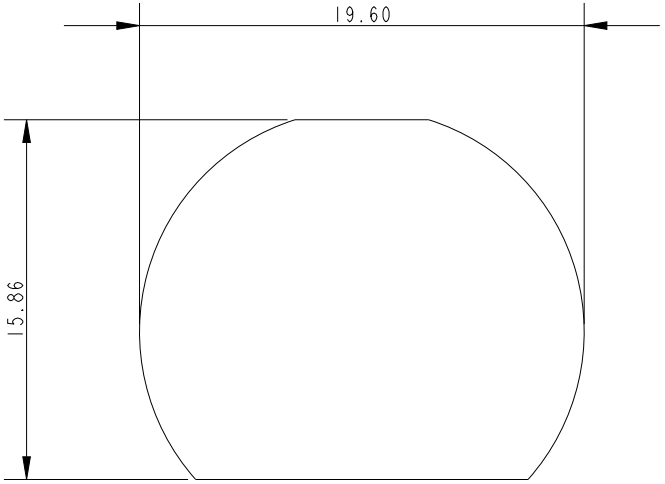

SCALE 3:1

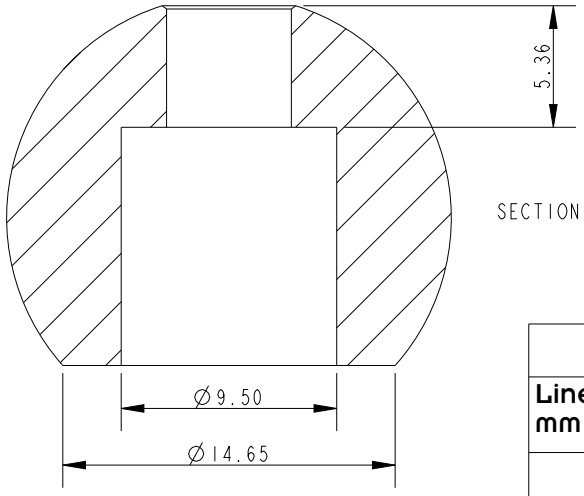

SECTION B-B

Specification	
Line Diameter mm	Size mm
5	19

DIMENSIONS FOR REFERENCE ONLY

allenbrothers.co.uk
+44(0)1621 772477

Title	Description
A-222-REF	Medium Ball Stopper