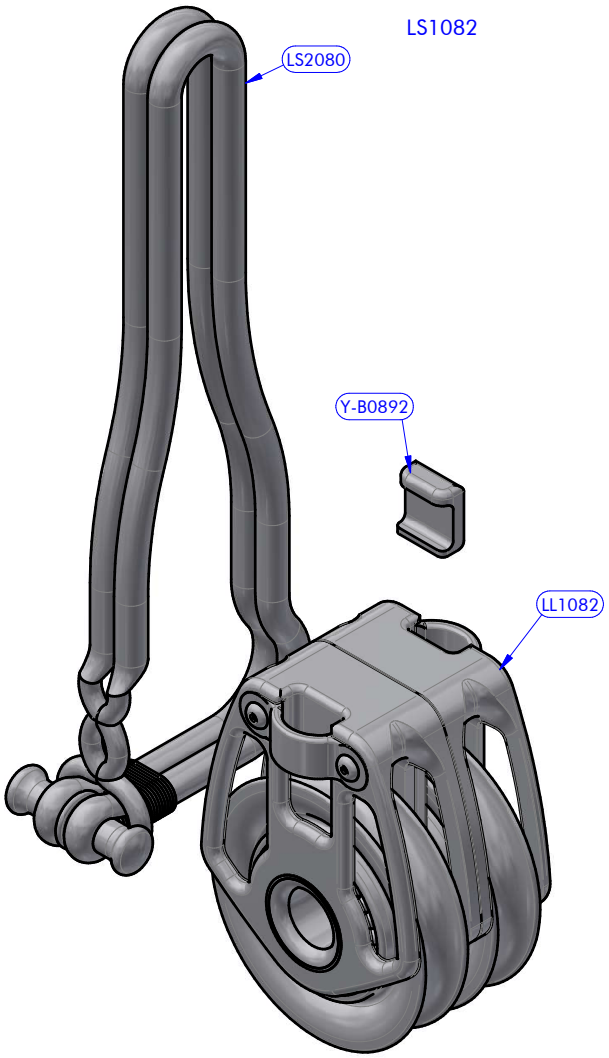

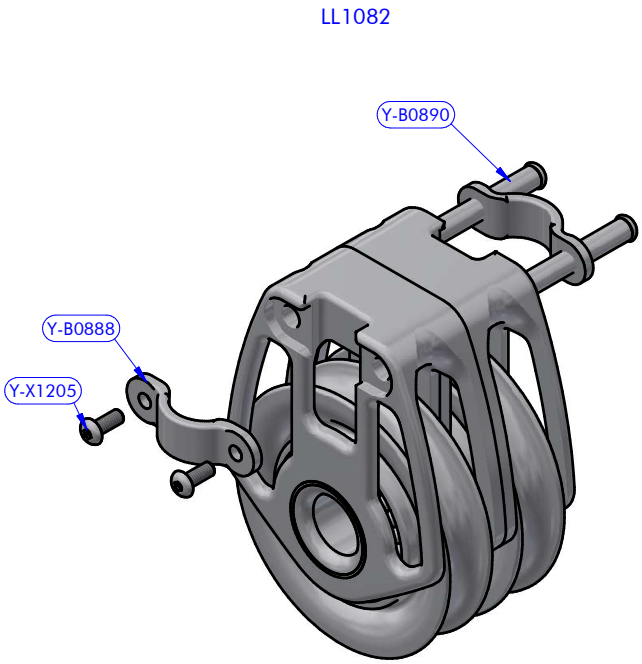

PART LIST LS1082			
CODE	DESCRIPTION	MATERIAL	Q.TY
LL1082	Size 80	Various	1
LS2080	Without cover	Various	1
Y-B0892	Spacer	Plastic	1

PART LIST LL1082			
CODE	DESCRIPTION	MATERIAL	Q.TY
Y-B0888	Bridge	Aluminium	2
Y-B0890	Threaded pipe	S.Steel	2
Y-X1205	Screw	S.Steel	4

antal	Looper Block D080 Double + With Snap-Loop No cover DESCRIPTION	LS1082 MODEL CODE	05/10/2023 DATE	00 REV.
			20022305 DWG N.	1 / 1 PG.