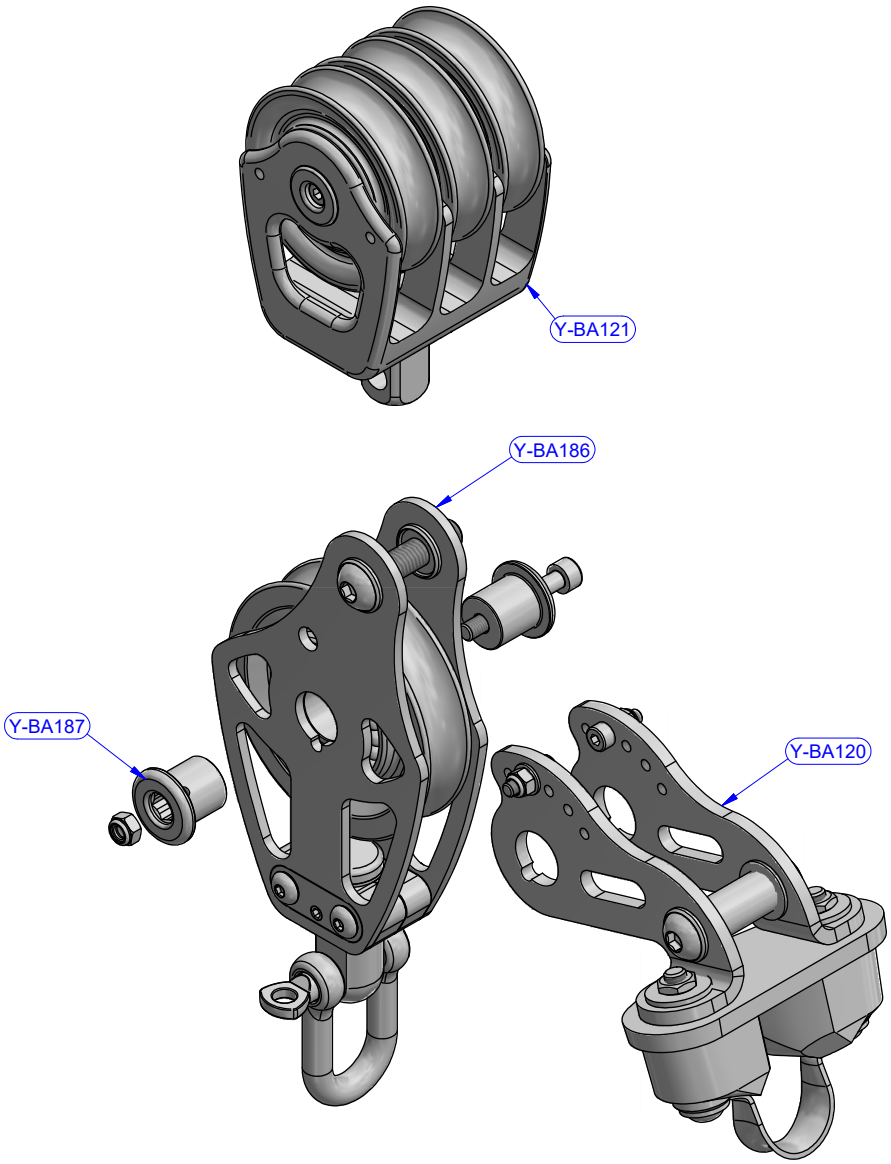

PART LIST			
CODE	DESCRIPTION	MATERIAL	Q.TY
Y-BA120	Cam cleat	Various	1
Y-BA121	Triple sheave	Various	1
Y-BA186	Y-BA186	Various	1
Y-BA187	Caps kit	Various	1

antal	OPF Series FAMILY	00732/C ARTICLE	00732/C MODEL CODE	20/07/2020 DATE	00 REV.
	Exploded view DESCRIPTION			20072303 DWG N.	/ PG.