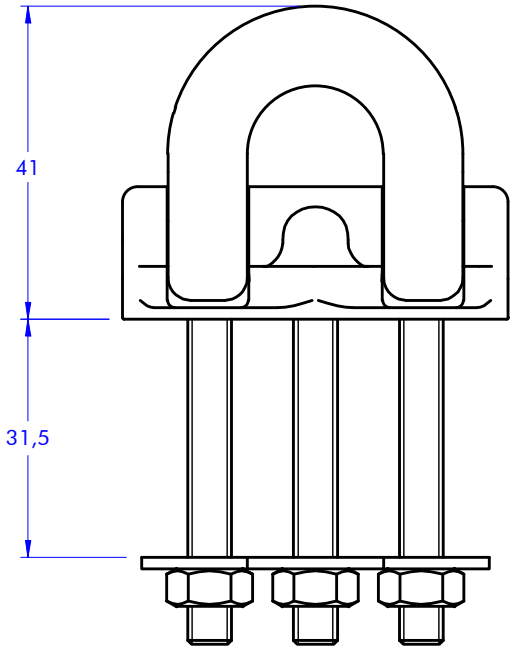

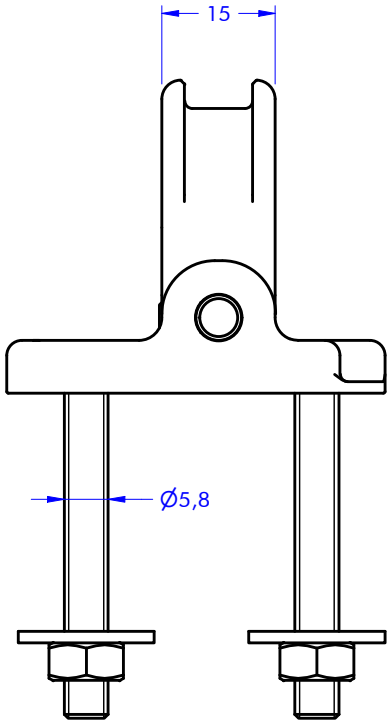

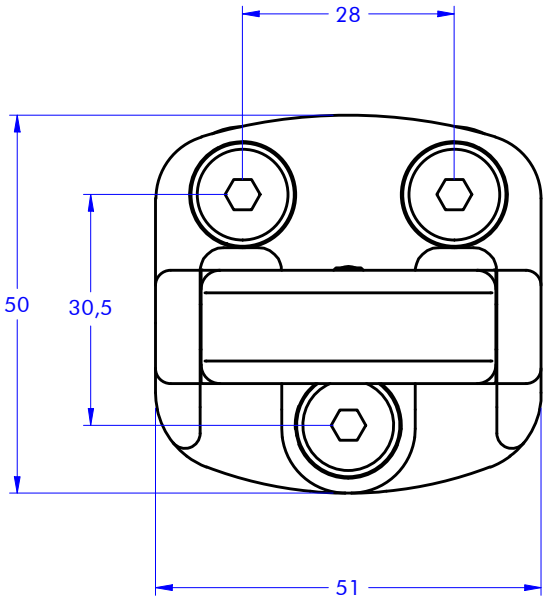

antal	Folding Deck Shackle Dyneema size D06 AL DESCRIPTION	DS06 MODEL CODE	1500 SWL	0,123 kg WEIGHT	
			31/01/2024 DATE	00 REV.	1 : 1 SCALE

www.antal.it - antal@antal.it

This drawing is Antal's exclusive ownership, protected by law. Cannot be reproduced or handed over without preventive written consent.