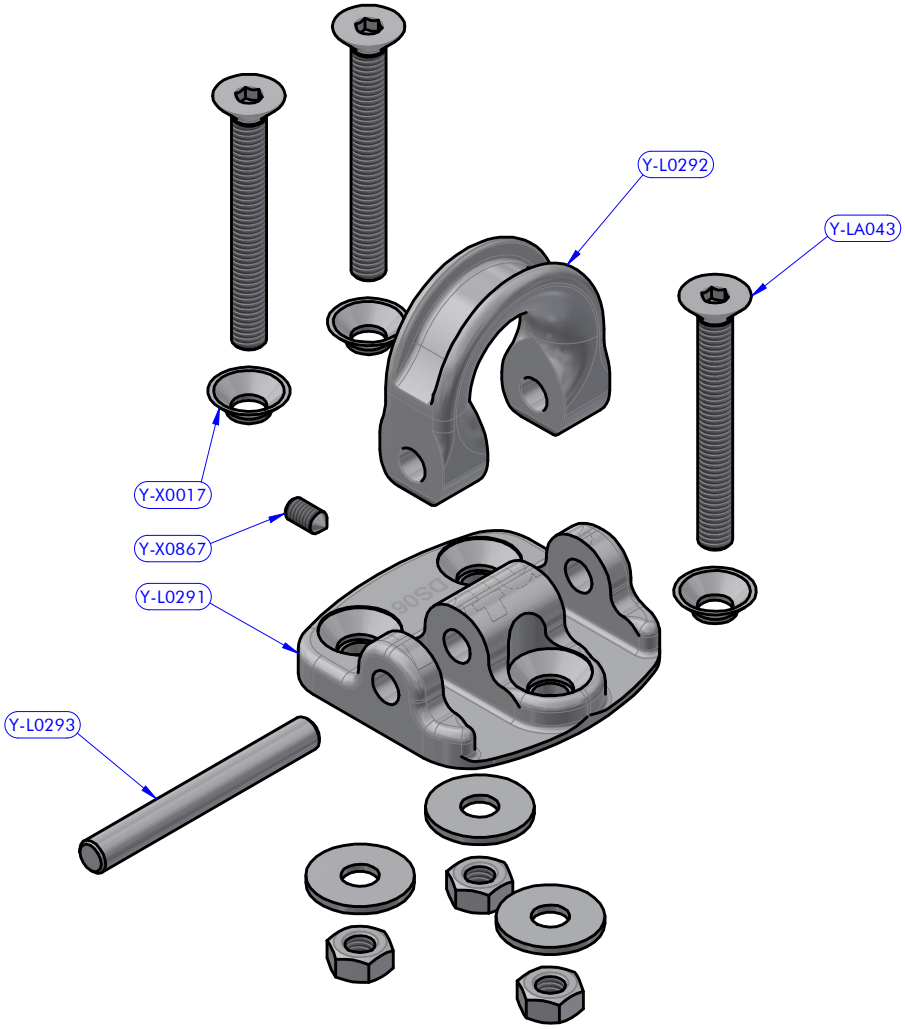

Cod.**DS06**
Folding Deck Shackle Dyneema size D06 AL

PART LIST			
CODE	DESCRIPTION	MATERIAL	Q.TY
Y-L0291	Base	Aluminium	1
Y-L0292	Shackle	Aluminium	1
Y-L0293	Cylinder pin	S.Steel	1
Y-LA043	Fixing screw kit	S.Steel	3
Y-X0017	Insulating Bushing	Plastic	3
Y-X0867	Cone point set screw	S.Steel	1

antal	Folding Deck Shackle Dyneema size D06 AL DESCRIPTION	**DS06** MODEL CODE	31/01/2024 DATE	00 REV.
			24013103 DWG N.	1 / 1 PG.