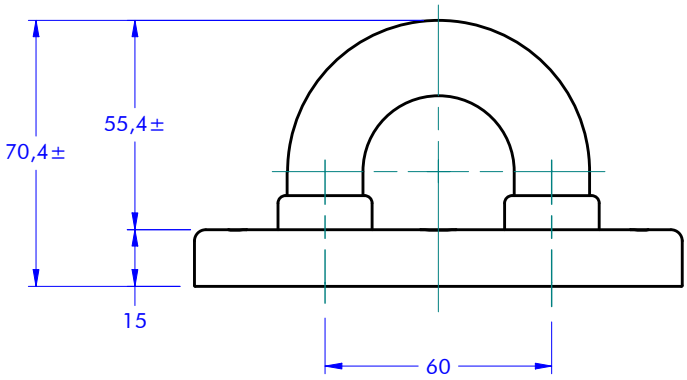

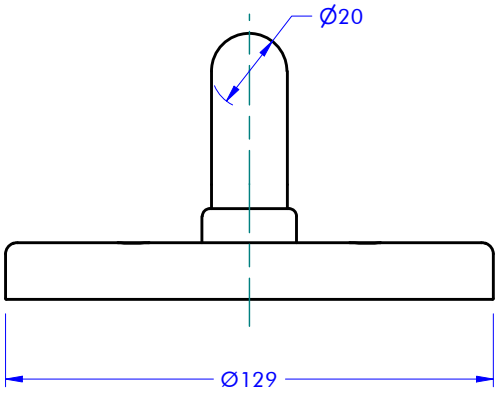

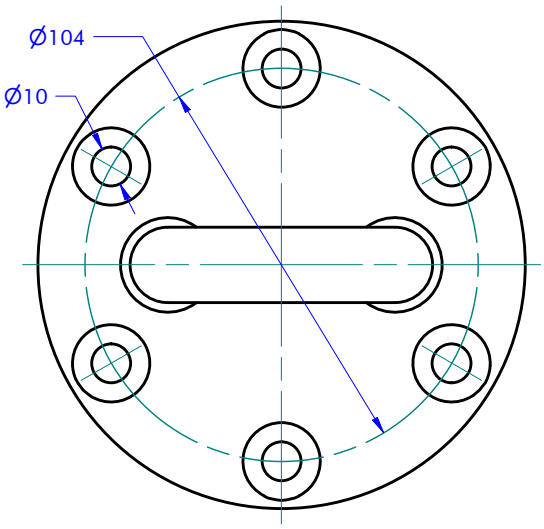

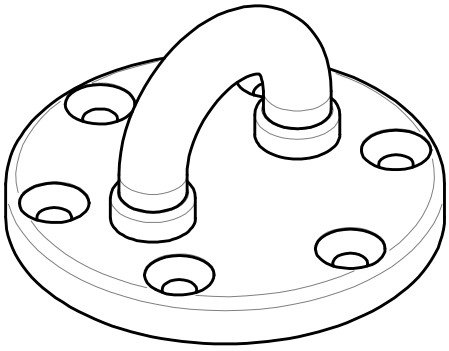

antal	Accessories CATEGORY	4 Screws Pad-Eye FAMILY	**7220** MODEL CODE	9000 kg SWL	1.8 kg WEIGHT
	Padeye ARTICLE			04/12/2018 DATE	1 : 2 SCALE
	www.antal.it - antal@antal.it				