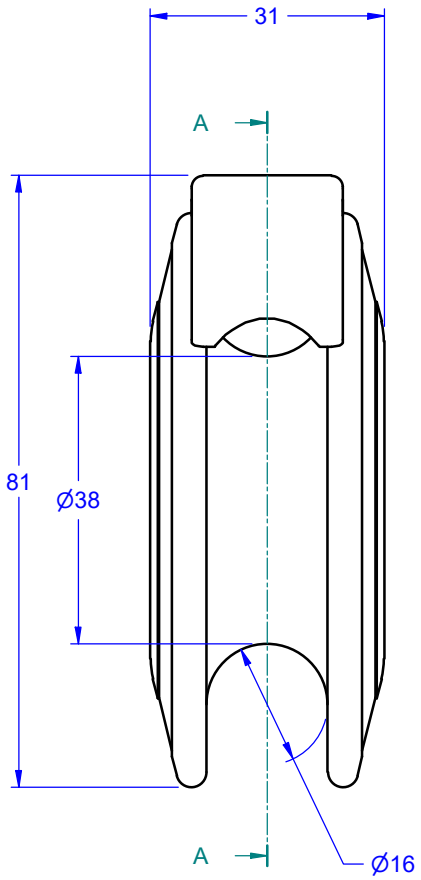

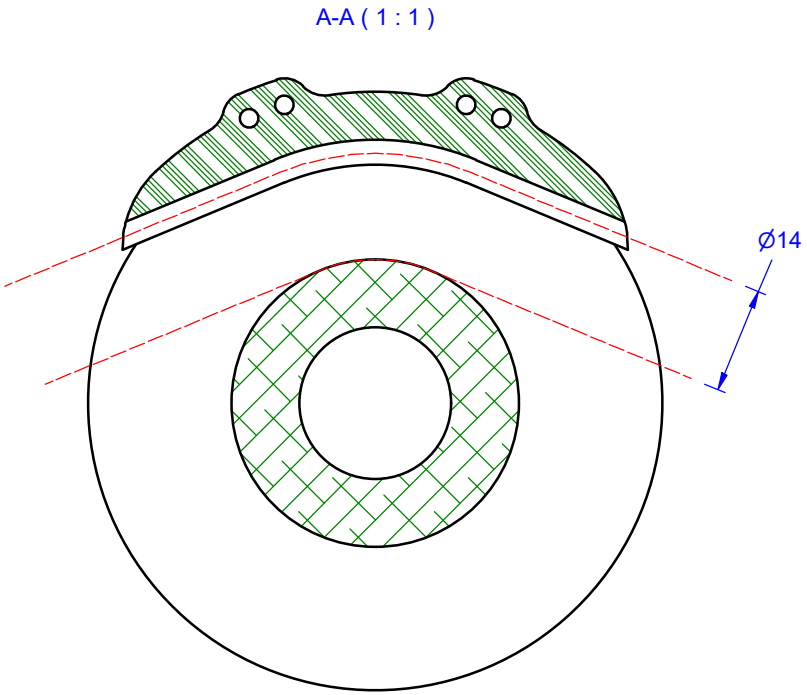

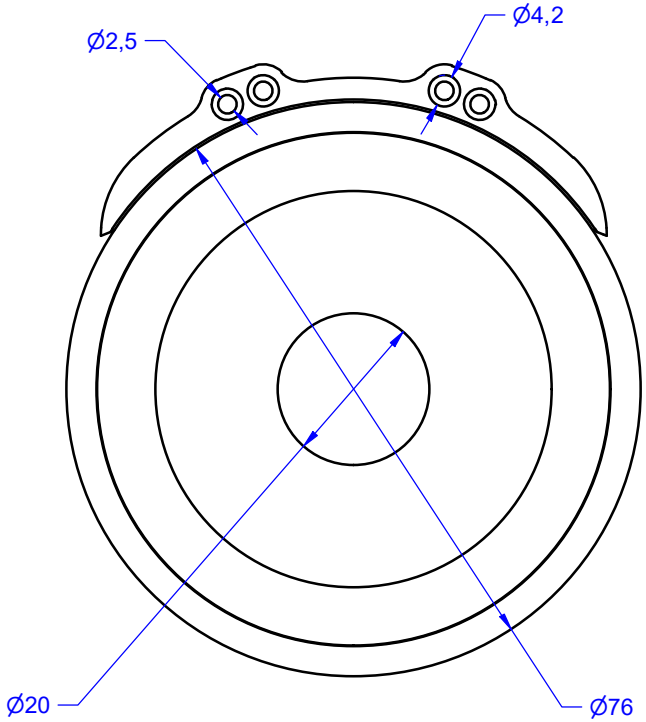

antal	Soft Link (CATEGORY)	Sector ring (FAMILY)	RR76.14 (MODEL CODE)	3800 kg (SWL)	160 g (WEIGHT)
	Ring+ cap (ARTICLE)			26/08/2020 (DATE)	1 : 1 (SCALE)
	www.antal.it - antal@antal.it				