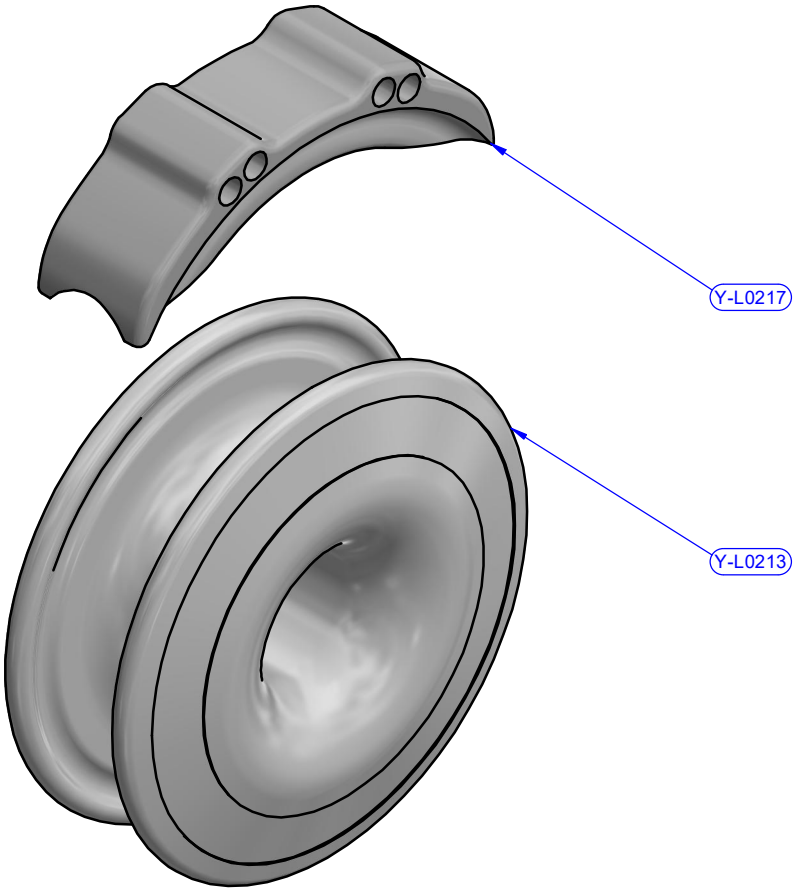

PART LIST

CODE	DESCRIPTION	MATERIAL	Q.TY
Y-L0213	Slit ring	Aluminium	1
Y-L0217	Cap	Mekton	1

antal	Sector ring (FAMILY)	Ring+ cap (ARTICLE)	RR76.14 (MODEL CODE)	26/08/2020 (DATE)	00 (REV.)
	Exploded view (DESCRIPTION)			20082620 (DWG N.)	1 / 1 (PG.)