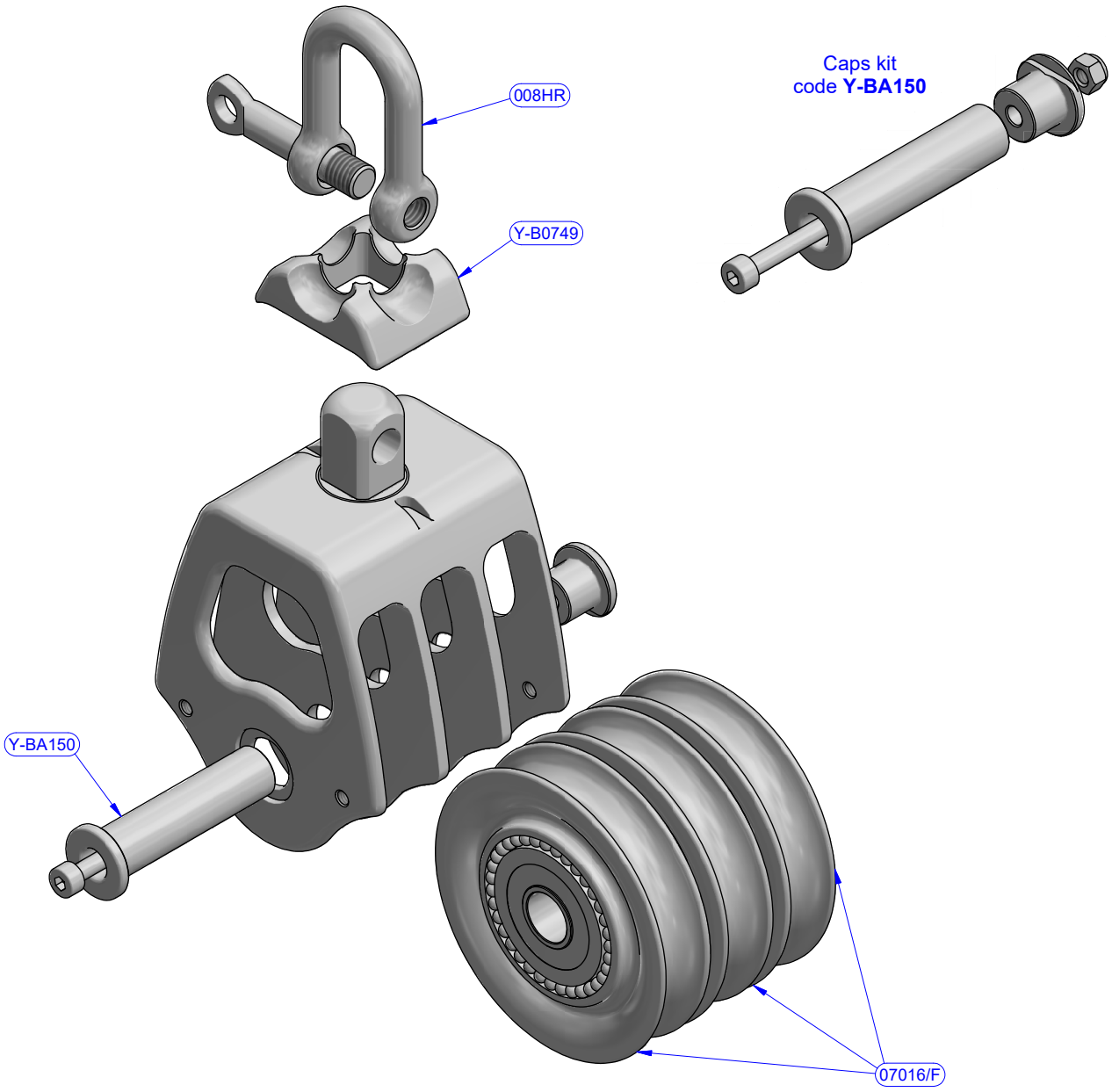

PART LIST			
CODE	DESCRIPTION	MATERIAL	Q.TY
008HR	Shackle	S.Steel HR	1
07016/F	Sheave	Various	3
Y-B0749	Head lock	Plastic	1
Y-BA150	Caps kit	Various	1

antal	OPF Series FAMILY	Triple block ARTICLE	00705 MODEL CODE	07/10/2020 DATE	00 REV.
	Exploded view DESCRIPTION			17071919 DWG N.	1 / 1 PG.