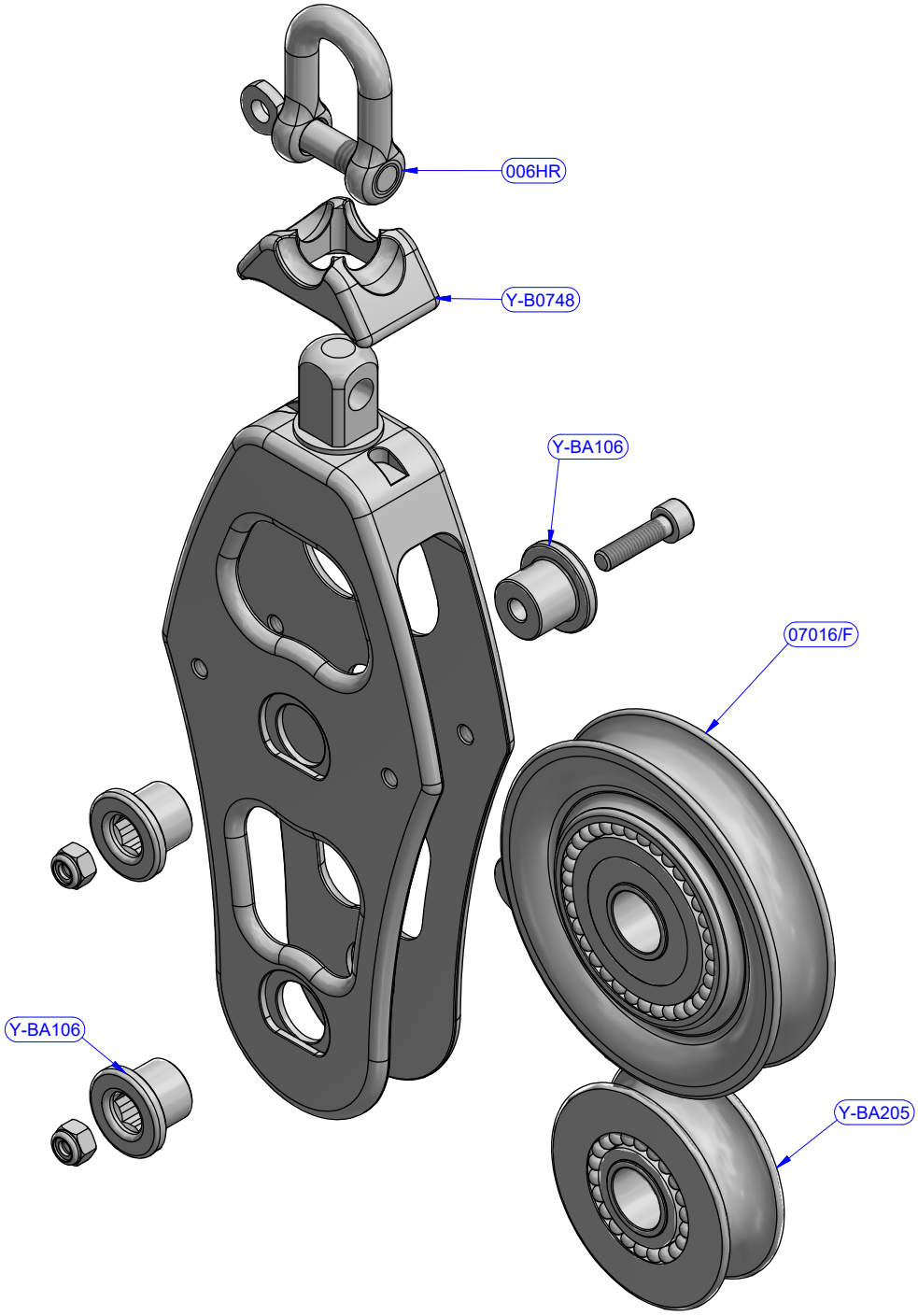


| PART LIST | | | |
|---|---|---|---|
| CODE | DESCRIPTION | MATERIAL | Q.TY |
| 006HR | Shackle | Various | 1 |
| 07016/F | Sheave | Various | 1 |
| Y-B0748 | Head lock | Plastic | 1 |
| Y-BA106 | Caps kit | Various | 2 |
| Y-BA205 | Sheave | Various | 1 |

| | | | | | |
|---|---|---|---|---|---|
| antal | OPF Series (FAMILY) | n.d. (ARTICLE) | 00707 (MODEL CODE) | 05/10/2020 (DATE) | 00 (REV.) |
| | Exploded view (DESCRIPTION) | | | 17071813 (DWG N.) | / (PG.) |