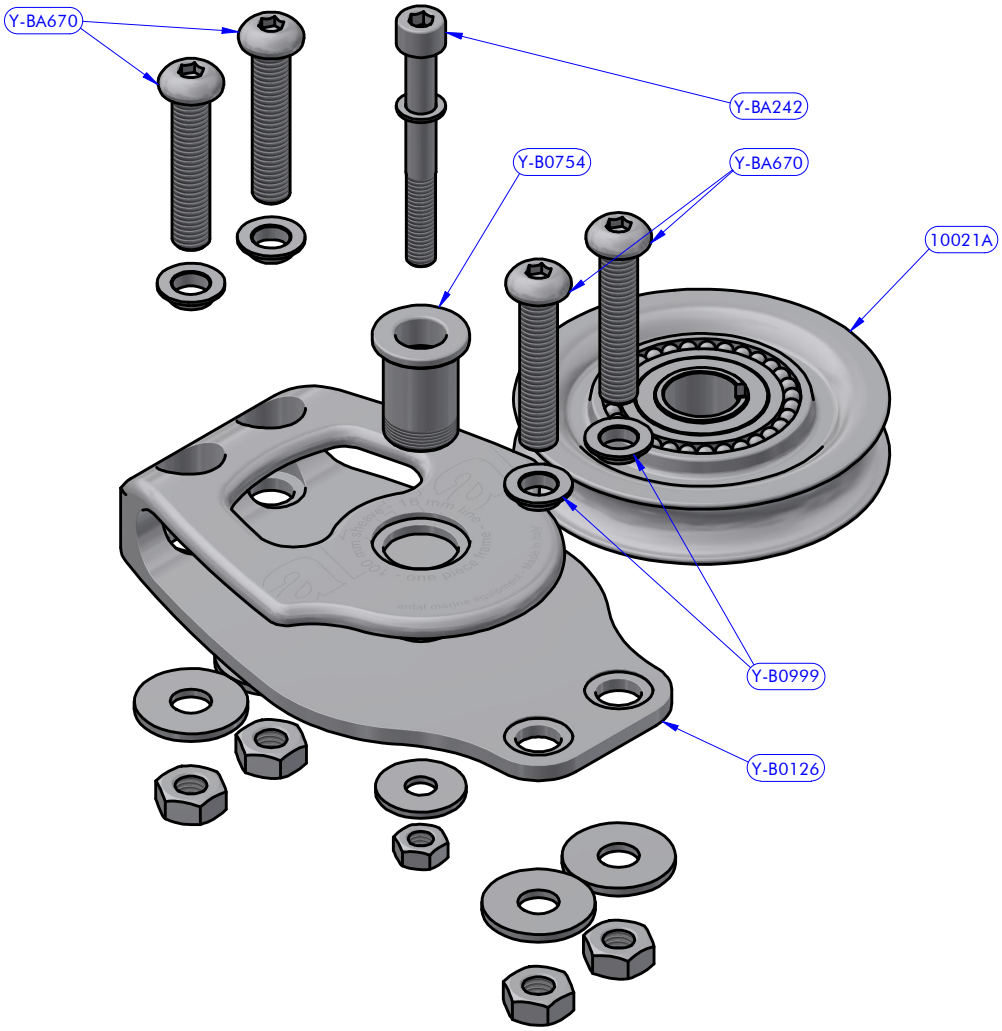

Cod.**01011**

OPF Deck-Block D100 Single

PART LIST - 01011			
CODE	DESCRIPTION	MATERIAL	Q.TY
10021A	Sheave	Various	1
Y-B0126	Cheekplate	Aluminium	1
Y-B0754	Cap	Aluminium	1
Y-B0999	Bushing	S.Steel	4
Y-BA242	Fixing screw kit	S.Steel	1
Y-BA670	Fixing screw kit	S.Steel	4
Y-L0219	Washer	Tufnol	1

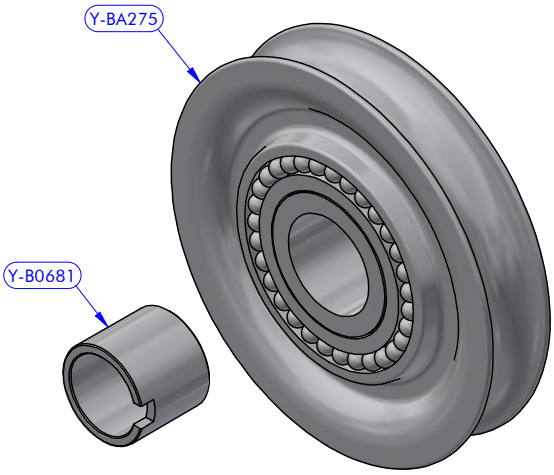

Cod.**10021A**
Sheave D100-020 T21 Alu + S.Steel Hub (OPF)

PART LIST - 10021A			
CODE	DESCRIPTION	MATERIAL	Q.TY
Y-B0681	Hub	S.Steel	1
Y-BA275	Sheave assy	Various	1

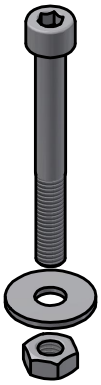

Cod.**Y-BA242**
Fixing screw kit DIN 912 M08 x 070 + 1 washer A4 + nut

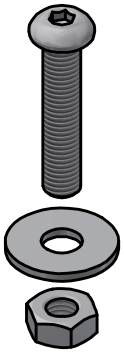

Cod.**Y-BA670**
BHSCS screw kit ISO 7380 M10 x 050 + S.Steel Washer + Nut