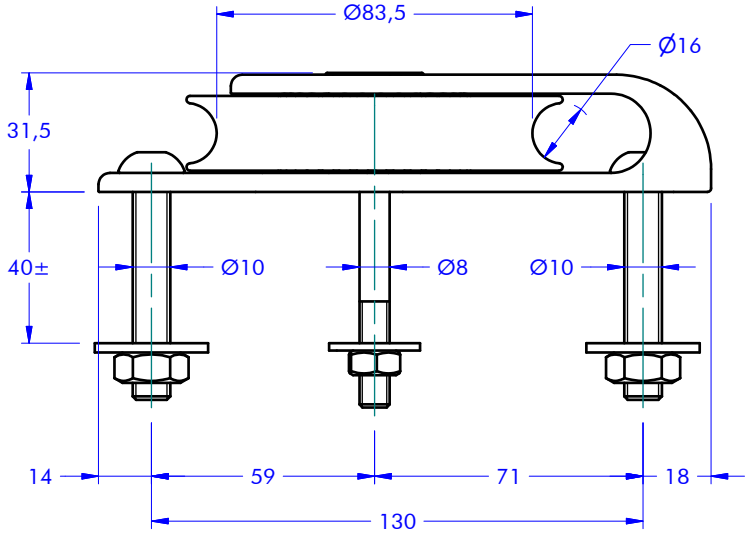

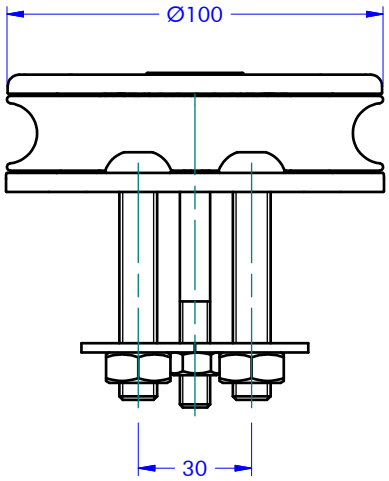

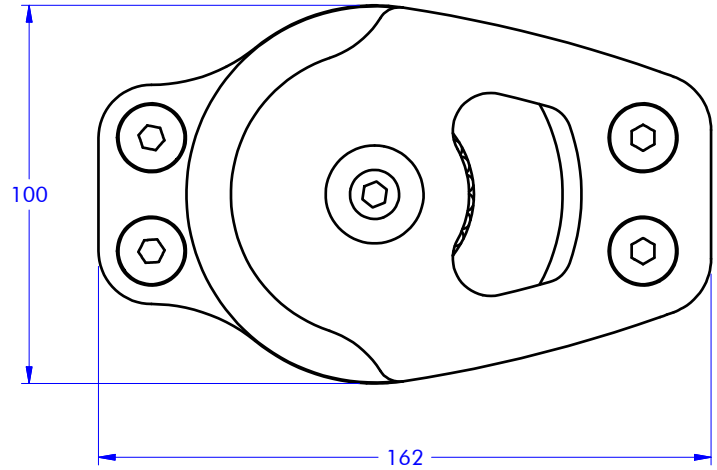

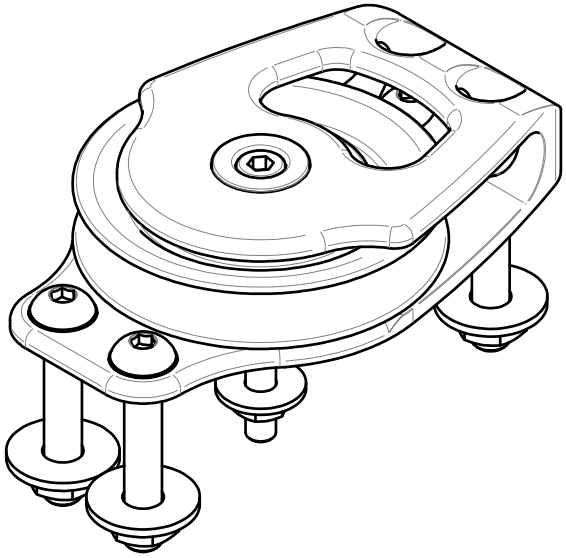

antal	Blocks (CATEGORY)	OPF Series (FAMILY)	01011 (MODEL CODE)	3500 kg (SWL)	0.45 kg (WEIGHT)
	Foot block (ARTICLE)			29/04/2019 (DATE)	1 : 2 (SCALE)

www.antal.it - antal@antal.it