All information is copyright of allen ©

A2020HL

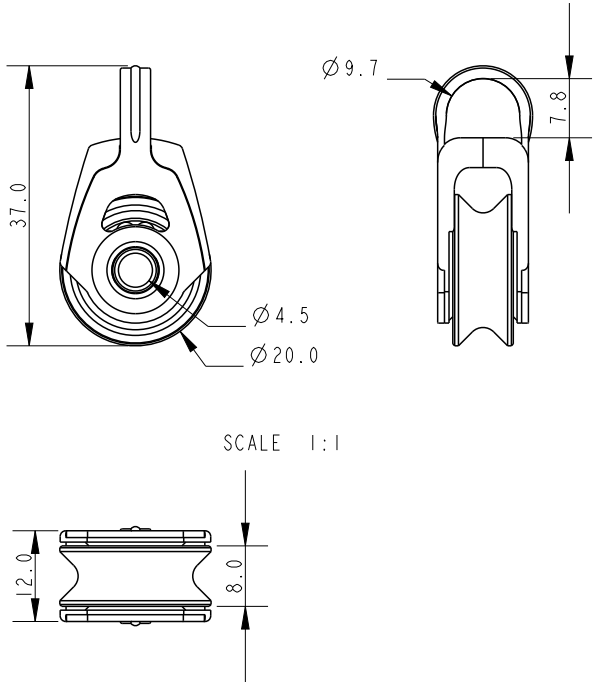

SCALE 2:1

Specification

Length mm	Line Diameter mm	Shackle Pin mm	Breaking Load kg	MWL kg	Weight g	Bearing Detail
37	6	-	540	250	17.5	Stainless Steel

DIMENSIONS FOR REFERENCE ONLY

allenbrothers.co.uk
+44(0)1621 772477

Title	Description
A2020HL-REF	Single High Load - Stainless Steel Sheave