All information is copyright of allen ©

A2022-XHL

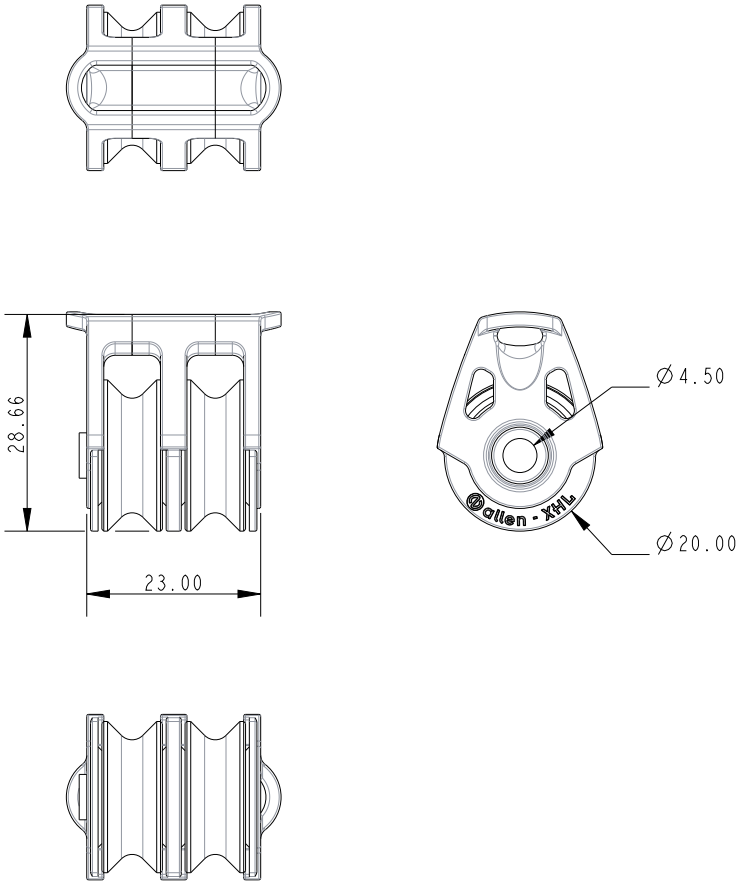

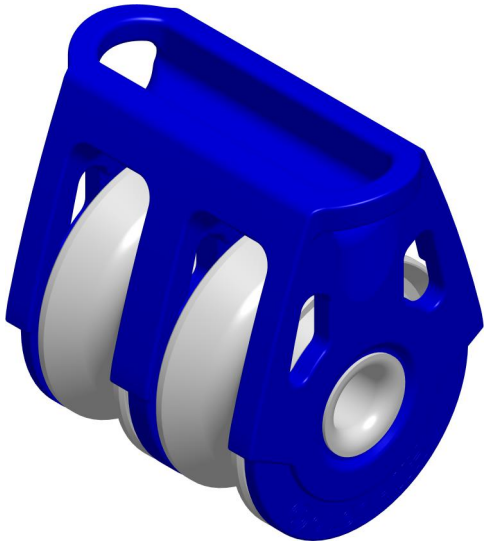

SCALE 2:1

Specification				
Length mm	Line Diameter mm	Breaking Load kg	MWL kg	Weight g
29	6	900	600	30

DIMENSIONS FOR REFERENCE ONLY

allenbrothers.co.uk
+44(0)1621 772477

Title	Description
A2022-XHL-REF	Extreme High Load 20mm Double