All information is copyright of allen ©

A2023-XHL

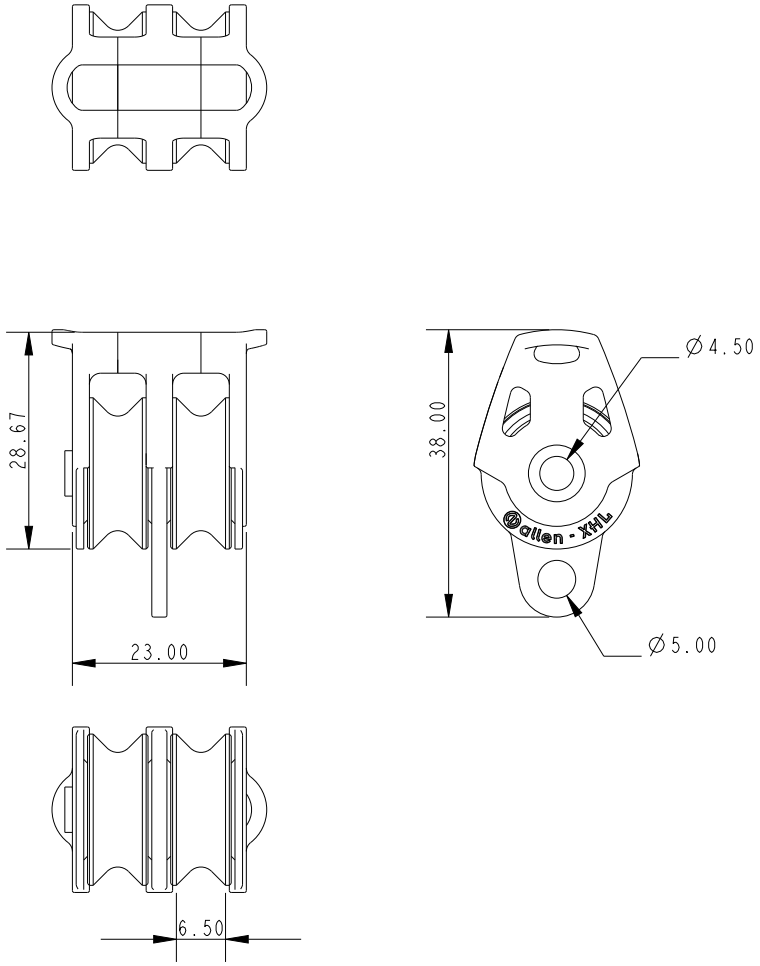

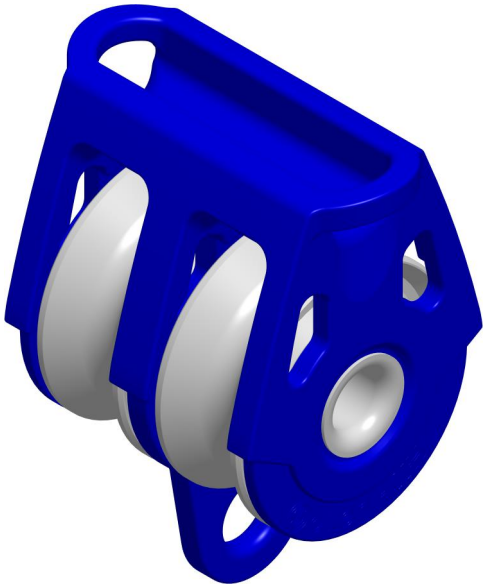

Specification				
Length mm	Line Diameter mm	Breaking Load kg	MWL kg	Weight g
38	6	900	600	33

DIMENSIONS FOR REFERENCE ONLY

allenbrothers.co.uk
+44(0)1621 772477

Title	Description
A2023-XHL-REF	XHL 20mm Double with Becket