All information is copyright of allen ©

A2026HL

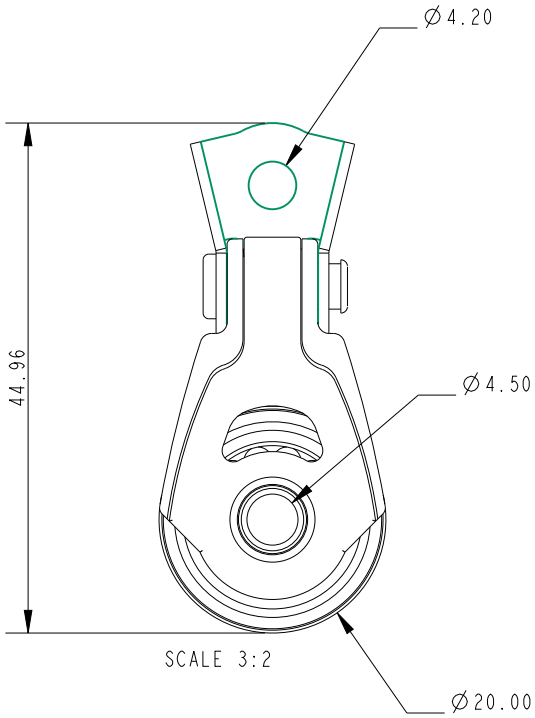

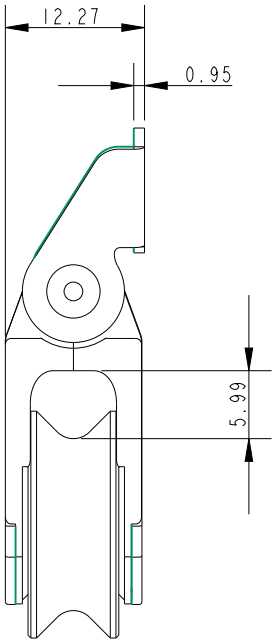

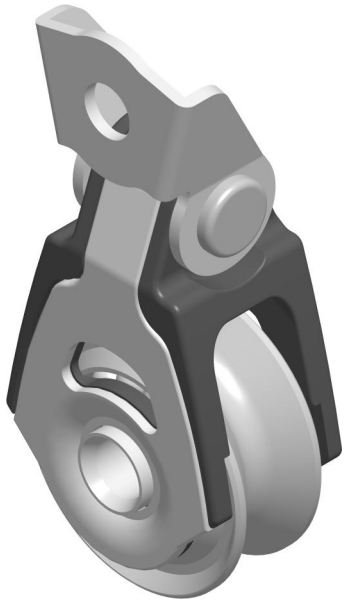

SCALE 2:1

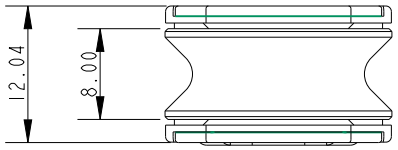

Specification						
Sheave Diameter mm	Length mm	Max Line Diameter mm	Breaking Load kg	Max Working Load kg	Weight g	Bearing Detail
20	45	6	350	250	21.3	Stainless Steel Ball

DIMENSIONS FOR REFERENCE ONLY

allenbrothers.co.uk
+44(0)1621 772477

Title	Description
A2026HL-REF	HL cheek block