All information is copyright of allen ©

A2028HL

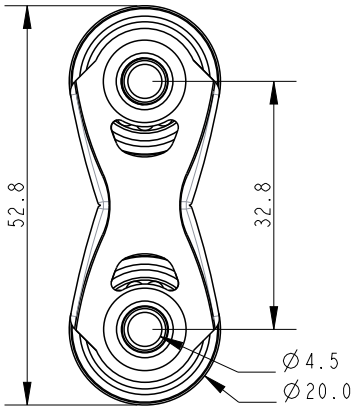

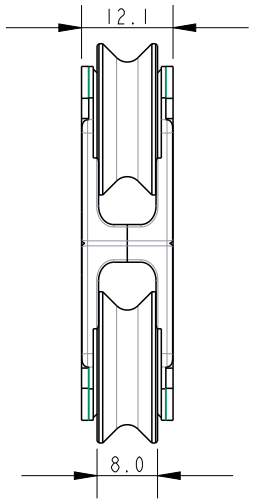

SCALE 2:1

Specification						
Length mm	Line Diameter mm	Shackle Pin mm	Breaking Load kg	MWL kg	Weight g	Bearing Detail
52.8	6	-	540	300	32	Stainless Steel

DIMENSIONS FOR REFERENCE ONLY

allenbrothers.co.uk
+44(0)1621 772477

Title	Description
A2028HL-REF	High Load Back To Back