All information is copyright of allen ©

A2034HL

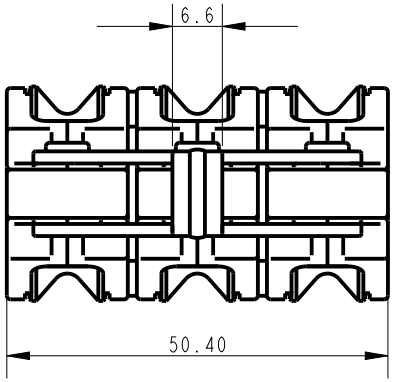

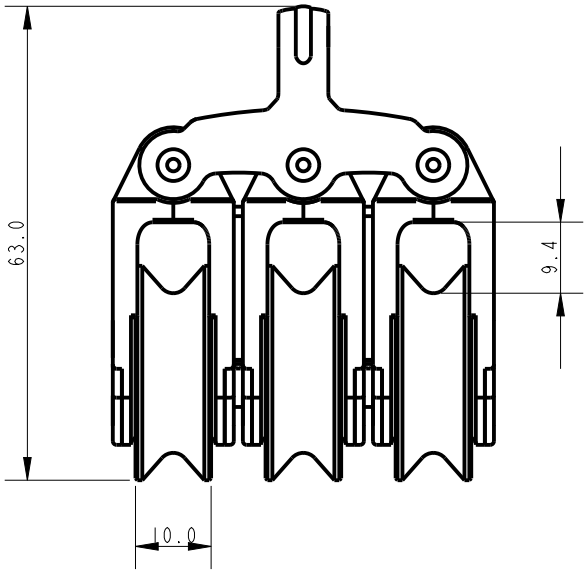

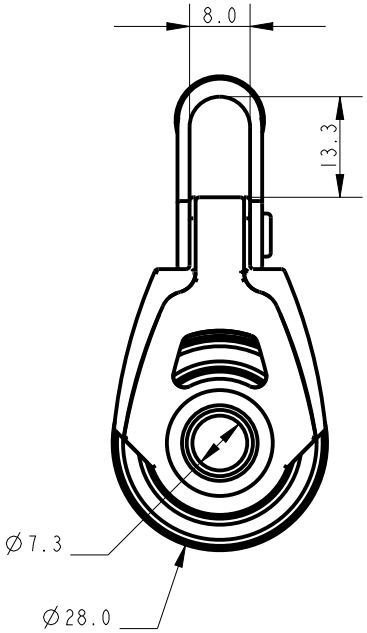

Specification					
Sheave Diameter mm	Length mm	Max Line Diameter mm	Breaking Load kg	Max Working Load kg	Weight g
28	63	8	800	300	132

DIMENSIONS FOR REFERENCE ONLY

allenbrothers.co.uk
+44(0)1621 772477

Title	Description
A2034HL-REF	HL Dynamic Triple