All information is copyright of allen ©

A20401HL

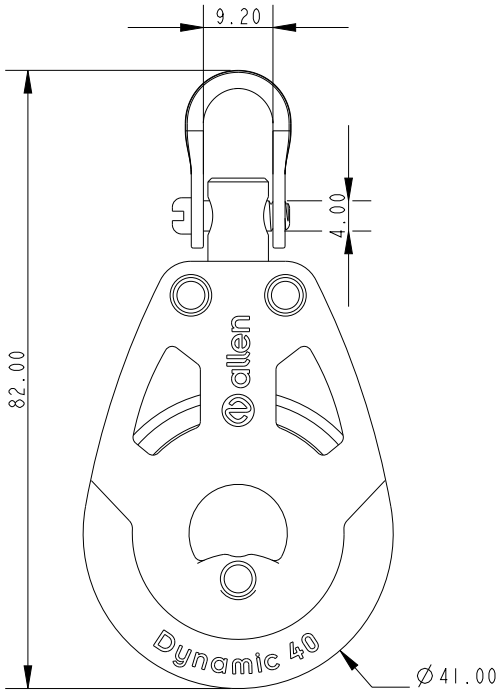

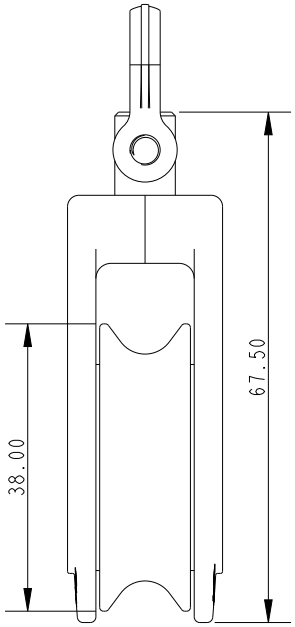

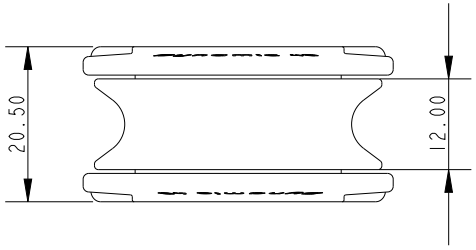

Specification					
Length mm	Line Diameter mm	Shackle Pin mm	Breaking Load kg	MWL kg	Weight g
82.00	10	4	780	360	75

DIMENSIONS FOR REFERENCE ONLY

allenbrothers.co.uk
+44(0)1621 772477

Title	Description
A20401HL-REF	40mm High Load Swivel Block