All information is copyright of allen ©

A20401SRHL

SCALE 2:1

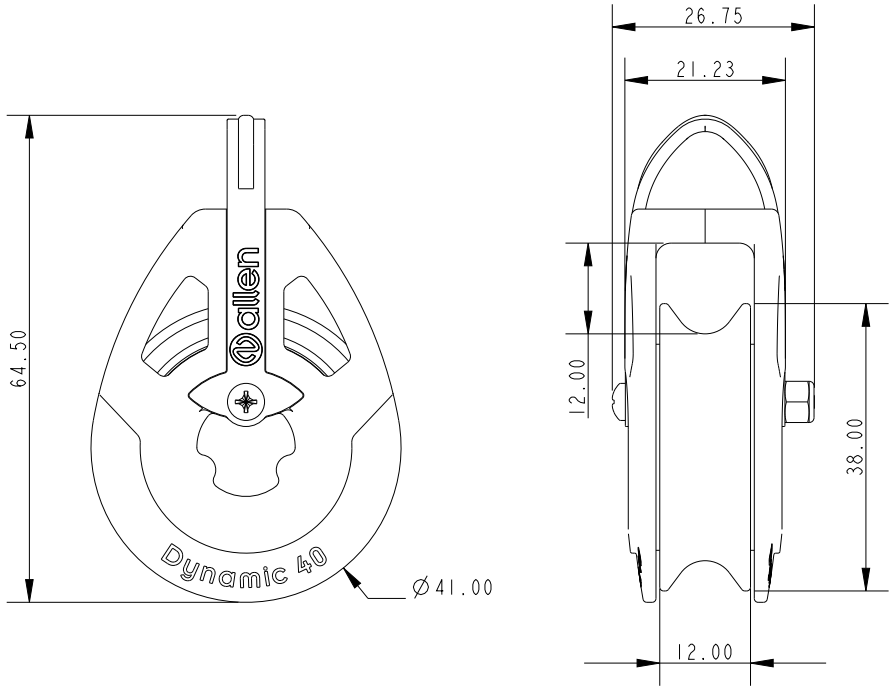

Specification					
Length mm	Line Diameter mm	Fixing Size	Breaking Load kg	MWL kg	Weight g
64.50	10.00	M3	700	360	63

DIMENSIONS FOR REFERENCE ONLY

allenbrothers.co.uk
+44(0)1621 772477

Title	Description
A20401SRHL-REF	Single with Removable Strap