All information is copyright of allen ©

A2031XHL-873

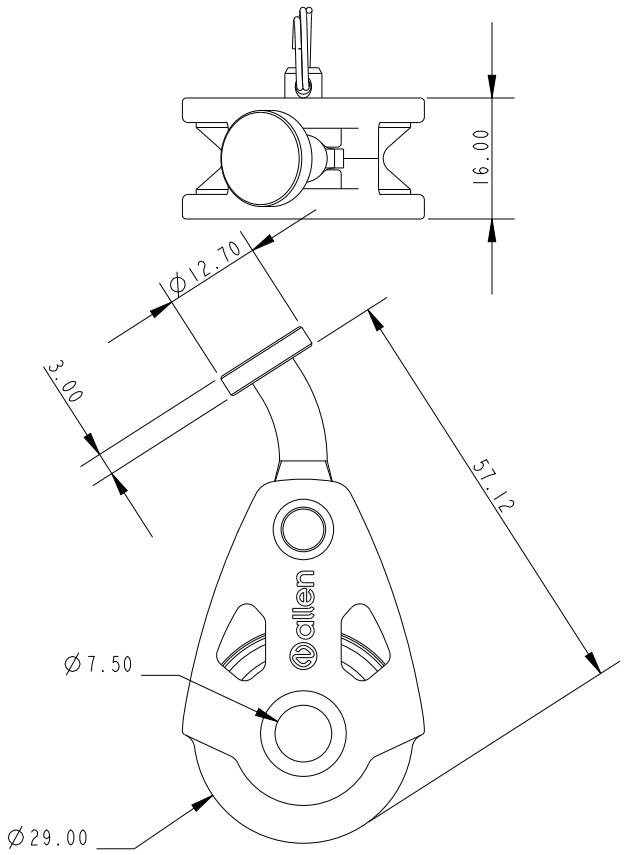

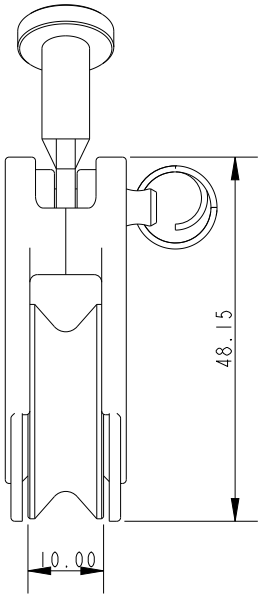

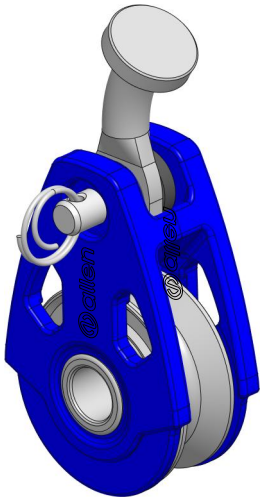

Available colours: Black & Blue

Specification						
Length mm	Line Diameter mm	Clevis Pin mm	Breaking Load kg	MWL kg	Weight g	Bearing Detail
43	8	5	1000	350	55	Stainless Steel

DIMENSIONS FOR REFERENCE ONLY

allenbrothers.co.uk
+44(0)1621 772477

Title	Description
A2031XHL-873-REF	Extreme High Load Block