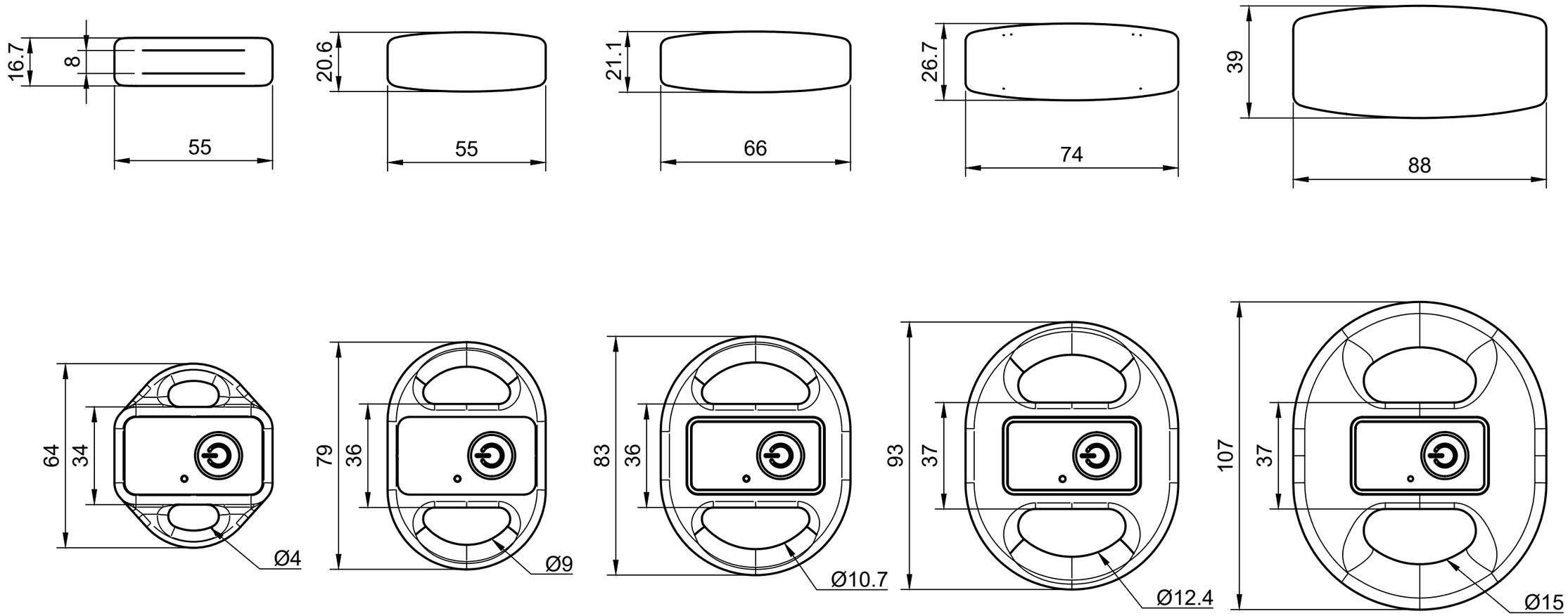

Nano
SR09

2t
SR11

5t
SR12

10t
SR13

20t
SR10

Part Number	SR09	SR11	SR12	SR13	SR10
Working Load	600kg	2,000kg	5,000kg	10,000kg	20,000kg
Strop Diameter	4mm	9mm	10.7mm	12.4mm	15mm
Weight	72g	160g	210g	360g	798g
Battery Life	2,000 hr	2,000 hr	2,000 hr	2,000 hr	2,000 hr

Cyclops Marine
Unit 25 The Slipway
Port Solent
Portsmouth
PO6 4TR

Project	smartlink2		
Title	Technical Envelope Drawing	Rev.	
Part	SR09, SR10, SR11, SR12, SR13		
Finish			

Scale	Format	Sheet
1:1.5	A3	1/6

1ST ANGLE

Drawn: Caleb Barnes	Date: 4/02/2025
Approved	Date
Issue	Date
Material: Ti-6Al-4V, T6 Aluminium (Nano)	
Dimensions: mm, degrees Tolerance unless stated: 0.1mm, 0.1º	

© Cyclops Marine Limited. All rights reserved. Reproduction, use and dissemination of this drawing may only be undertaken with the prior consent of Cyclops Marine Limited. Do not scale.