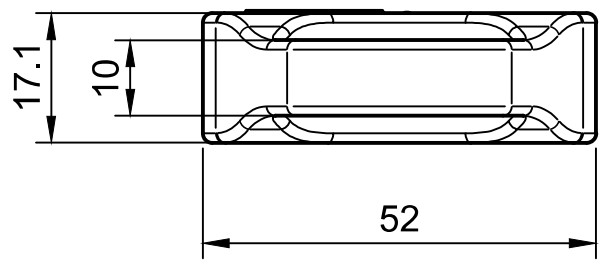

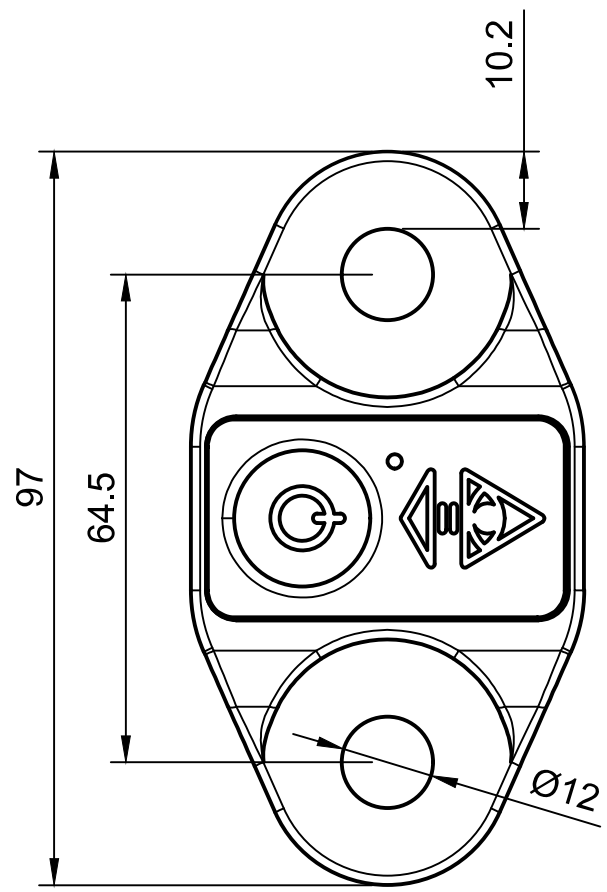

Part Number	SE01
Working Load Limit (kgf/lbs)	2000 / 4400
Factor of Safety	4x
Weight	160g
Battery type	Lipo
Battery Life	2400 hours

Cyclops Marine
Unit 25 The Slipway
Port Solent
Portsmouth
PO6 4TR

1ST ANGLE	Scale 1:1	Format A3	Sheet 2/5

Project: smartlink EE

Title: Dimesion Drawing

Rev.: B

Part: SE01

Finish:

Drawn: Caleb Barnes — Date: 30/01/2025

Approved: — Date:

Issue: — Date:

Material: Ti-6Al-4V

Dimensions: mm, degrees
Tolerance unless stated: 0.1mm, 0.1°

© Cyclops Marine Limited. All rights reserved. Reproduction, use and dissemination of this drawing may only be undertaken with the prior consent of Cyclops Marine Limited. Do not scale.