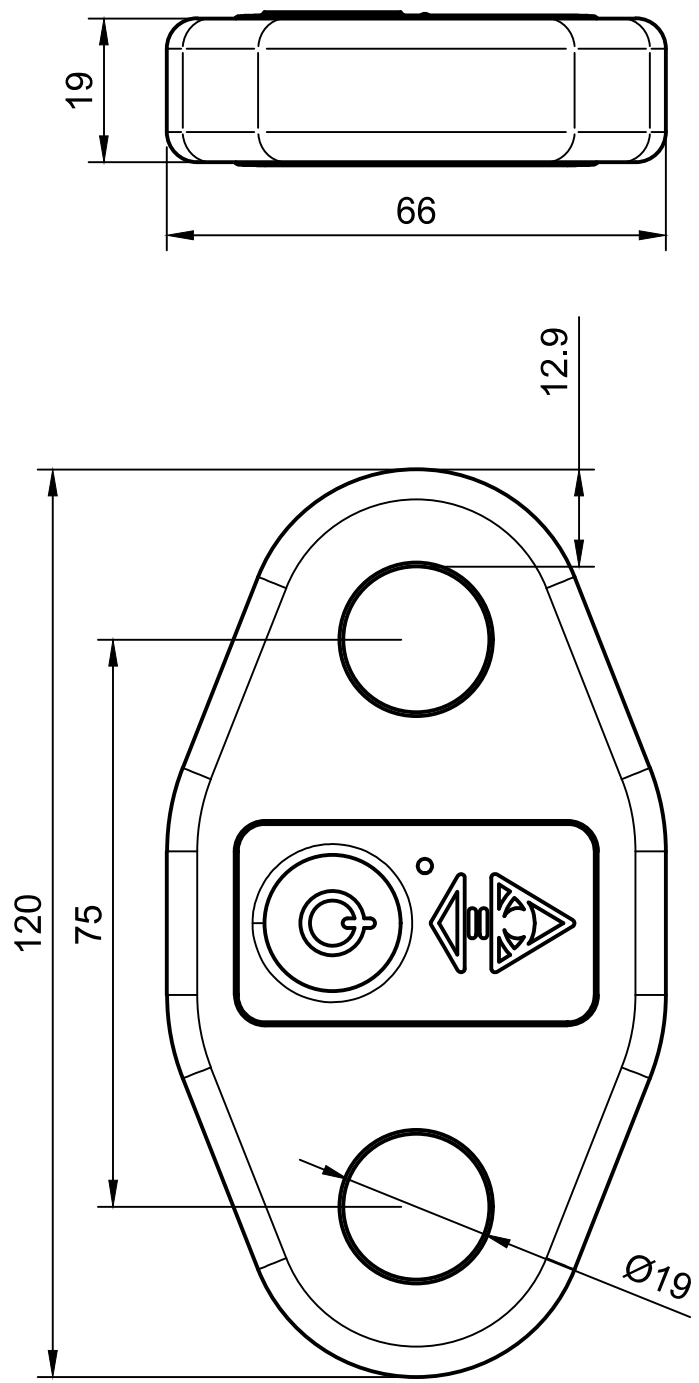

Part Number	SE02
Working Load Limit (kgf/lbs)	5000 / 11000
Factor of Safety	4x
Weight	390g
Battery type	Lipo
Battery Life	2400 hours

Cyclops Marine
Unit 25 The Slipway
Port Solent
Portsmouth
PO6 4TR

1ST ANGLE

Scale	Format	Sheet
1:1	A3	3/5

Project: smartlink EE

Title: Dimension Drawing

Rev.: B

Part: SE02

Finish:

Drawn: Caleb Barnes — Date: 30/01/2025

Approved: — Date:

Issue: — Date:

Material: Ti-6Al-4V

Dimensions: mm, degrees
Tolerance unless stated: 0.1mm, 0.1°

© Cyclops Marine Limited. All rights reserved. Reproduction, use and dissemination of this drawing may only be undertaken with the prior consent of Cyclops Marine Limited. Do not scale.