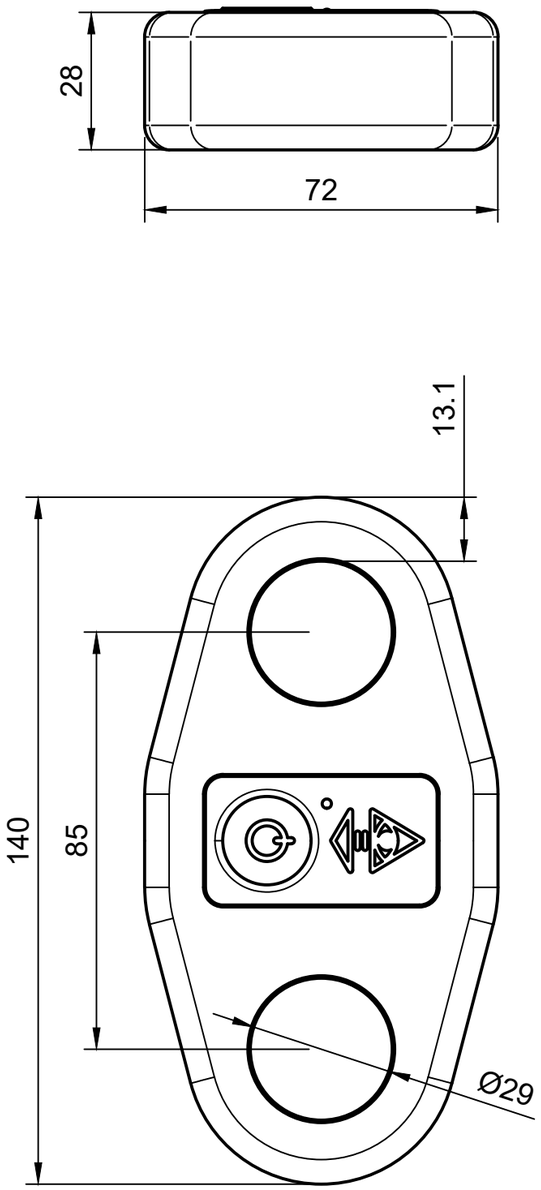

Part Number	SE03
Working Load Limit (kgf/lbs)	10000 / 22000
Factor of Safety	4x
Weight	710g
Battery type	Lipo
Battery Life	2400 hours

Cyclops Marine
Unit 25 The Slipway
Port Solent
Portsmouth
PO6 4TR

1ST ANGLE | Scale 1:1.5 | Format A3 | Sheet 4/5

Project: smartlink EE

Title: Dimension Drawing | Rev. B

Part: SE03

Finish:

Drawn: Caleb Barnes | Date: 30/01/2025

Approved: | Date:

Issue: | Date:

Material: Ti-6Al-4V

Dimensions: mm, degrees
Tolerance unless stated: 0.1mm, 0.1º

© Cyclops Marine Limited. All rights reserved. Reproduction, use and dissemination of this drawing may only be undertaken with the prior consent of Cyclops Marine Limited. Do not scale.