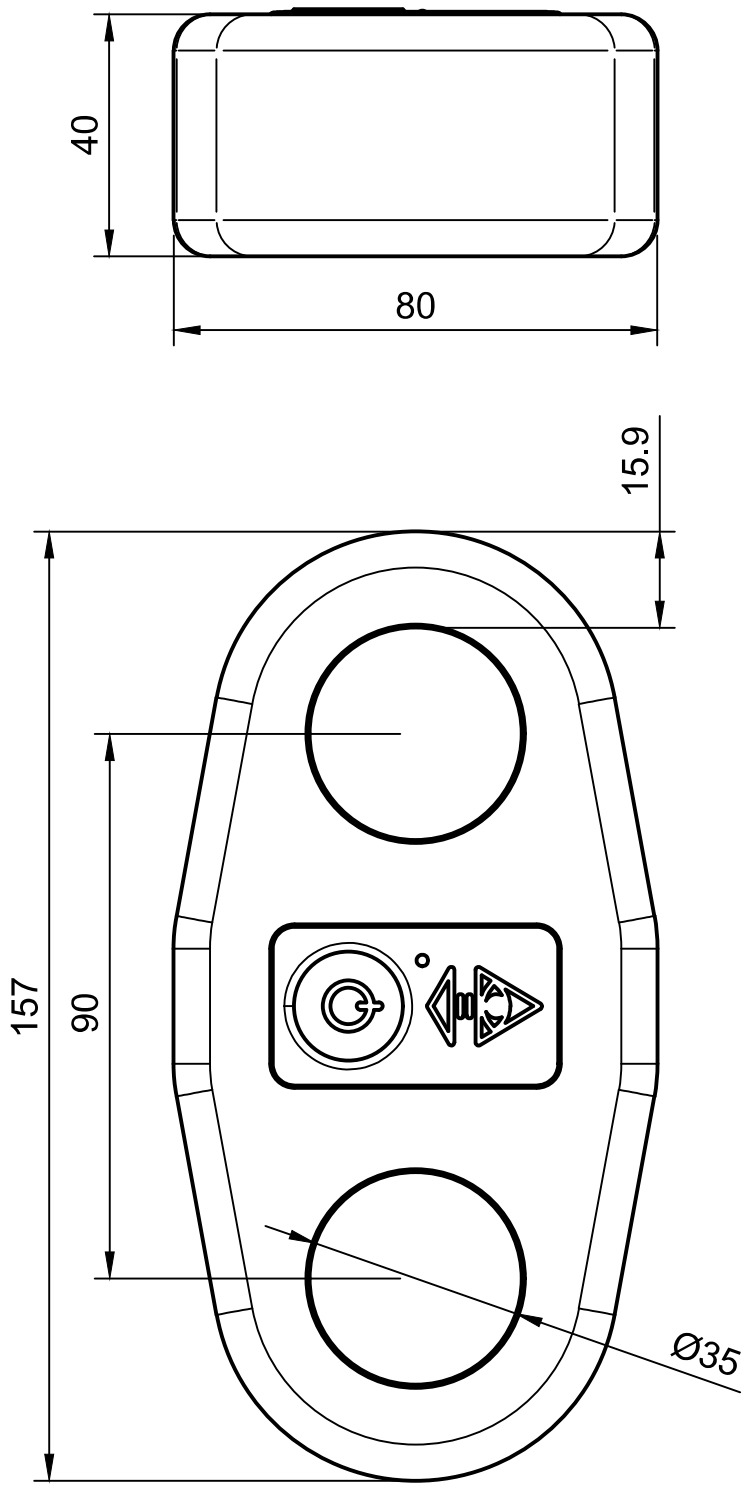

Part Number	SE05
Working Load Limit (kgf/lbs)	20000 / 44000
Factor of Safety	4x
Weight	770g
Battery type	Lipo
Battery Life	2400 hours

Cyclops Marine
Unit 25 The Slipway
Port Solent
Portsmouth
PO6 4TR

Project	smartlink EE		
Title	Dimension Drawing	Rev.	B
Part	SE05		
Finish			

Drawn	Caleb Barnes	Date	30/01/2025
Approved		Date	
Issue		Date	
Material	Ti-6Al-4V		

Dimensions: mm, degrees
Tolerance unless stated: 0.1mm, 0.1°

1ST ANGLE	Scale	Format	Sheet
	1:1.25	A3	5/5

© Cyclops Marine Limited. All rights reserved. Reproduction, use and dissemination of this drawing may only be undertaken with the prior consent of Cyclops Marine Limited. Do not scale.